GROUP 90

CIRCUIT DIAGRAMS

CONTENTS

J/B 90-4

JOINT CONNECTOR
- J/C <LH drive vehicles> 90-6
- J/C <RH drive vehicles> 90-12

CENTRALIZED JUNCTION 90-18

POWER DISTRIBUTION SYSTEM
- POWER DISTRIBUTION SYSTEM <LH drive vehicles> 90-24
- POWER DISTRIBUTION SYSTEM <RH drive vehicles> 90-30

STARTING SYSTEM 90-35

IGNITION SYSTEM
- IGNITION SYSTEM <LH drive vehicles> . . 90-36
- IGNITION SYSTEM <RH drive vehicles> . . 90-38

CHARGING SYSTEM
- CHARGING SYSTEM <LH drive vehicles> 90-40
- CHARGING SYSTEM <RH drive vehicles> 90-41

ENGINE CONTROL SYSTEM
- ENGINE CONTROL SYSTEM <LH drive vehicles> 90-42
- ENGINE CONTROL SYSTEM <RH drive vehicles> 90-50

COOLING SYSTEM
- COOLING SYSTEM <LH drive vehicles> 90-58
- COOLING SYSTEM <RH drive vehicles> 90-60

HEADLAMP
- HEADLAMP <LH drive vehicles> 90-62
- HEADLAMP <RH drive vehicles> 90-66

TAIL LAMP, POSITION LAMP, LICENCE PLATE LAMP AND LIGHTING MONITOR BUZZER
- TAIL LAMP, POSITION LAMP, LICENCE PLATE LAMP AND LIGHTING MONITOR BUZZER <LH drive vehicles> 90-70
- TAIL LAMP, POSITION LAMP, LICENCE PLATE LAMP AND LIGHTING MONITOR BUZZER <RH drive vehicles> 90-74

REAR FOG LAMP
- REAR FOG LAMP <LH drive vehicles> . . . 90-78
- REAR FOG LAMP <RH drive vehicles> . . . 90-82

Continued on next page

ROOM LAMP, LUGGAGE COMPARTMENT LAMP, IGNITION KEY CYLINDER ILLUMINATION LAMP AND DOOR AJAR WARNING LAMP

FRONT ROOM LAMP, REAR ROOM LAMP, LUGGAGE COMPARTMENT LAMP, IGNITION KEY CYLINDER ILLUMINATION LAMP AND DOOR AJAR WARNING LAMP <LH drive vehicles> 90-86

FRONT ROOM LAMP, REAR ROOM LAMP, LUGGAGE COMPARTMENT LAMP, IGNITION KEY CYLINDER ILLUMINATION LAMP AND DOOR AJAR WARNING LAMP <RH drive vehicles> 90-90

HEADLAMP LEVELING SYSTEM

HEADLAMP LEVELING SYSTEM <LH drive vehicles> 90-94

HEADLAMP LEVELING SYSTEM <RH drive vehicles> 90-96

TURN SIGNAL LAMP AND HAZARD WARNING LAMP

TURN SIGNAL LAMP AND HAZARD WARNING LAMP <LH drive vehicles> 90-98

TURN SIGNAL LAMP AND HAZARD WARNING LAMP <RH drive vehicles> 90-102

BACK-UP LAMP

BACK-UP LAMP <LH drive vehicles> 90-106

BACK-UP LAMP <RH drive vehicles> 90-107

STOP LAMP

STOP LAMP <LH drive vehicles> 90-108

STOP LAMP <RH drive vehicles> 90-109

HORN

HORN <LH drive vehicles> 90-110

HORN <RH drive vehicles> 90-111

METER AND GAUGE

METER AND GAUGE <LH drive vehicles> 90-112

METER AND GAUGE <RH drive vehicles> 90-116

WARNING LAMP

BRAKE WARNING LAMP, OIL PRESSURE WARNING LAMP AND FUEL WARNING LAMP <LH drive vehicles> 90-120

BRAKE WARNING LAMP, OIL PRESSURE WARNING LAMP AND FUEL WARNING LAMP <RH drive vehicles> 90-122

ENGINE OIL LEVEL WARNING LAMP

ENGINE OIL LEVEL WARNING LAMP <LH drive vehicles> 90-124

ENGINE OIL LEVEL WARNING LAMP <RH drive vehicles> 90-125

POWER WINDOWS

POWER WINDOWS <LH drive vehicles> 90-126

POWER WINDOWS <RH drive vehicles> 90-132

CENTRAL DOOR LOCKING SYSTEM

CENTRAL DOOR LOCKING SYSTEM <LH drive vehicles> 90-138

CENTRAL DOOR LOCKING SYSTEM <RH drive vehicles> 90-144

MANUAL AIR CONDITIONER

MANUAL AIR CONDITIONER <LH drive vehicles> 90-150

MANUAL AIR CONDITIONER <RH drive vehicles> 90-156

WINDSHIELD WIPER AND WASHER

WINDSHIELD WIPER AND WASHER <LH drive vehicles> 90-162

WINDSHIELD WIPER AND WASHER <RH drive vehicles> 90-166

Continued on next page

REMOTE CONTROLLED MIRROR

REMOTE CONTROLLED MIRROR <LH drive vehicles>. 90-170
REMOTE CONTROLLED MIRROR <RH drive vehicles> 90-171

DEFOGGER AND DOOR MIRROR HEATER

DEFOGGER AND DOOR MIRROR HEATER <LH drive vehicles>. 90-172
DEFOGGER AND DOOR MIRROR HEATER <RH drive vehicles> 90-174

SPARE CONNECTOR (FOR AUDIO)

SPARE CONNECTOR (FOR AUDIO) <LH drive vehicles>. 90-176
SPARE CONNECTOR (FOR AUDIO) <RH drive vehicles> 90-178

CIGARETTE LIGHTER

CIGARETTE LIGHTER <LH drive vehicles>. 90-180
CIGARETTE LIGHTER <RH drive vehicles> 90-181

CLOCK

CLOCK <LH drive vehicles> 90-182
CLOCK <RH drive vehicles>. 90-183

ANTI-SKID BRAKING SYSTEM (ABS)

ANTI-SKID BRAKING SYSTEM (ABS) <LH drive vehicles> 90-184
ANTI-SKID BRAKING SYSTEM (ABS) <RH drive vehicles> 90-192

SUPPLEMENTAL RESTRAINT SYSTEM (SRS)

SUPPLEMENTAL RESTRAINT SYSTEM (SRS) <LH drive vehicles> 90-200
SUPPLEMENTAL RESTRAINT SYSTEM (SRS) <RH drive vehicles> 90-204

ACD AND AYC

ACD AND AYC <LH drive vehicles> 90-208
ACD AND AYC <RH drive vehicles>. 90-218

IMMOBILIZER SYSTEM

IMMOBILIZER SYSTEM <LH drive vehicles>. 90-228
IMMOBILIZER SYSTEM <RH drive vehicles> 90-230

INTERCOOLER WATER SPLAY

INTERCOOLER WATER SPRAY <LH drive vehicles>. 90-232
INTERCOOLER WATER SPRAY <RH drive vehicles> 90-234

J/B

M3030000200414

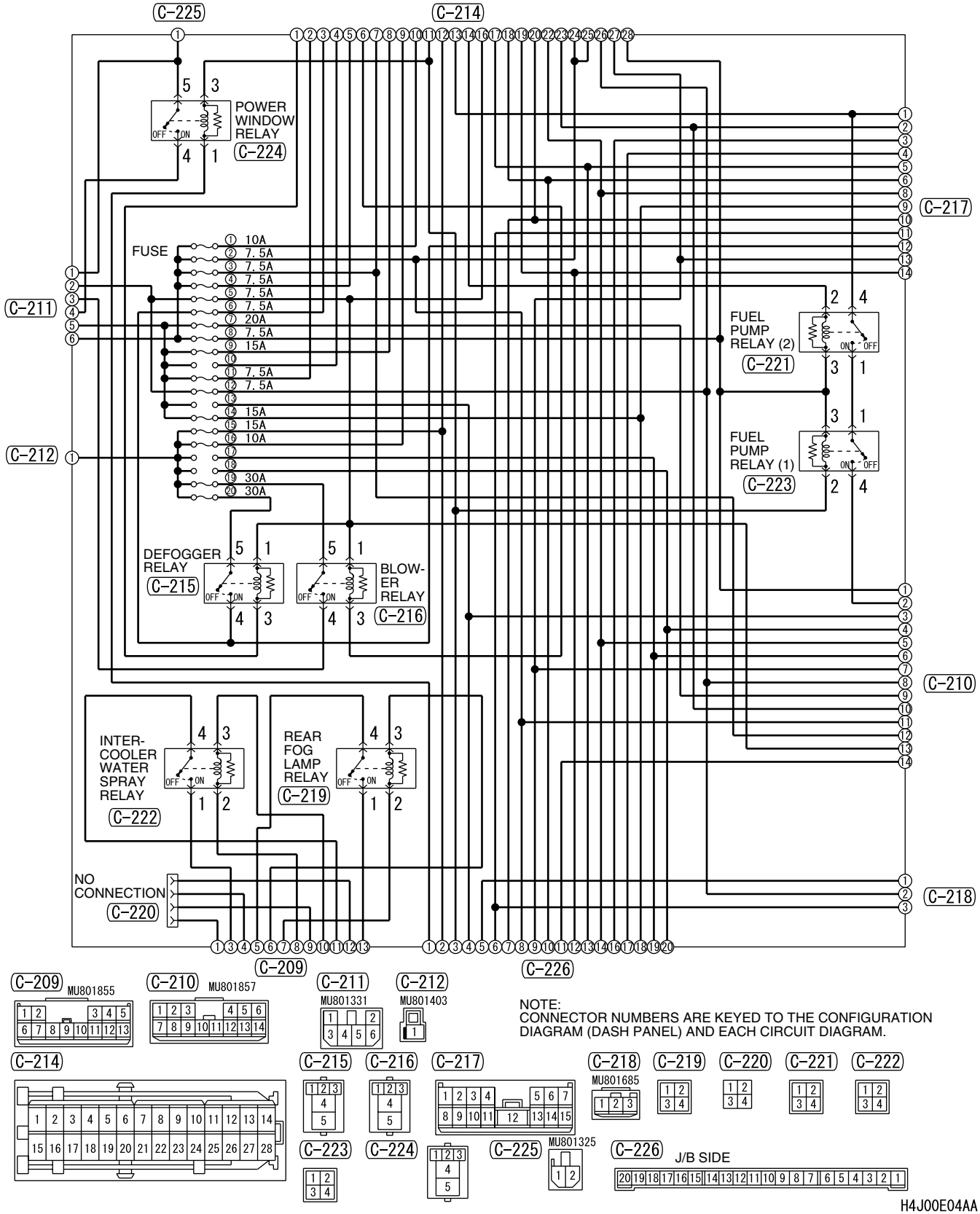

NOTE:
CONNECTOR NUMBERS ARE KEYED TO THE CONFIGURATION DIAGRAM (DASH PANEL) AND EACH CIRCUIT DIAGRAM.

H4J00E04AA

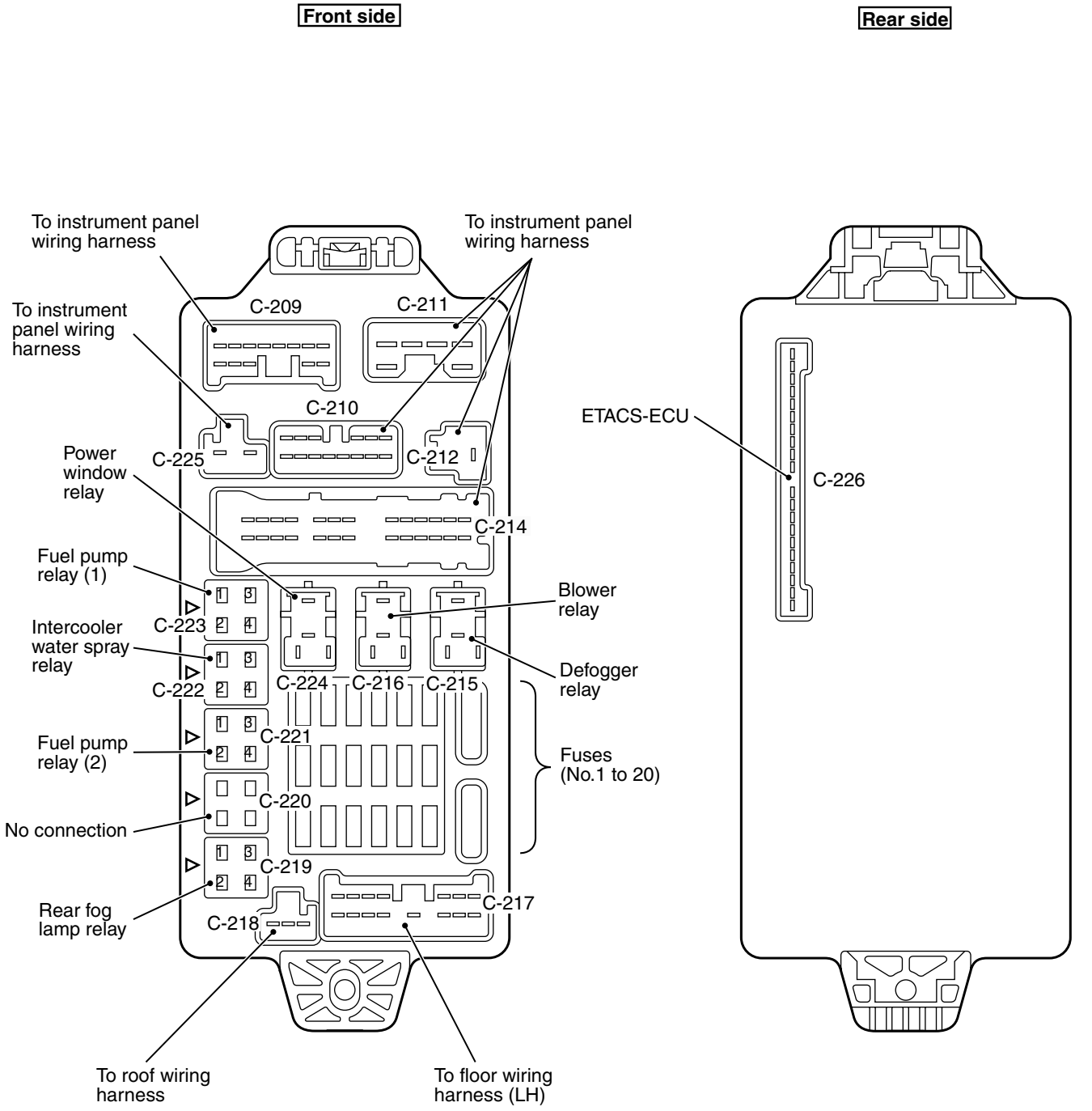

NOTE:

- *The triangle mark on the relay housing should face that on the J/B and the relay box.*

JOINT CONNECTOR

J/C <LH drive vehicles>

M3030014200525

NOTE: IN ACTUAL VEHICLES, ANY OF THE TERMINALS CONNECTED IN J/C ARE USED. THE TERMINAL ARRANGEMENT DESCRIBED IN THE CIRCUIT DIAGRAM MAY NOT BE IDENTICAL TO THOSE OF THE VEHICLES.

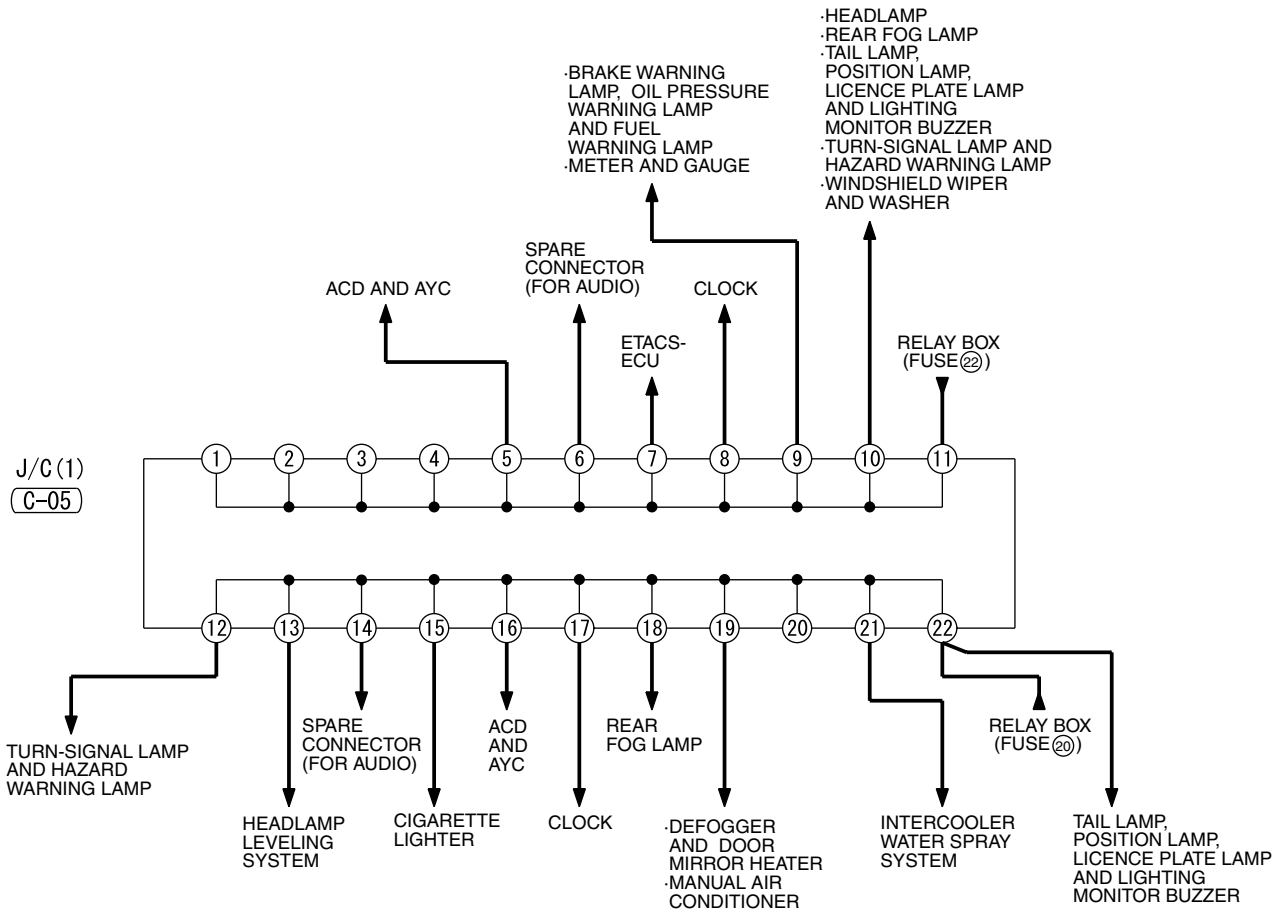

C-05

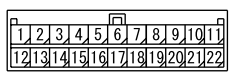

C-101

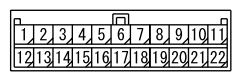

H4J00E05AA

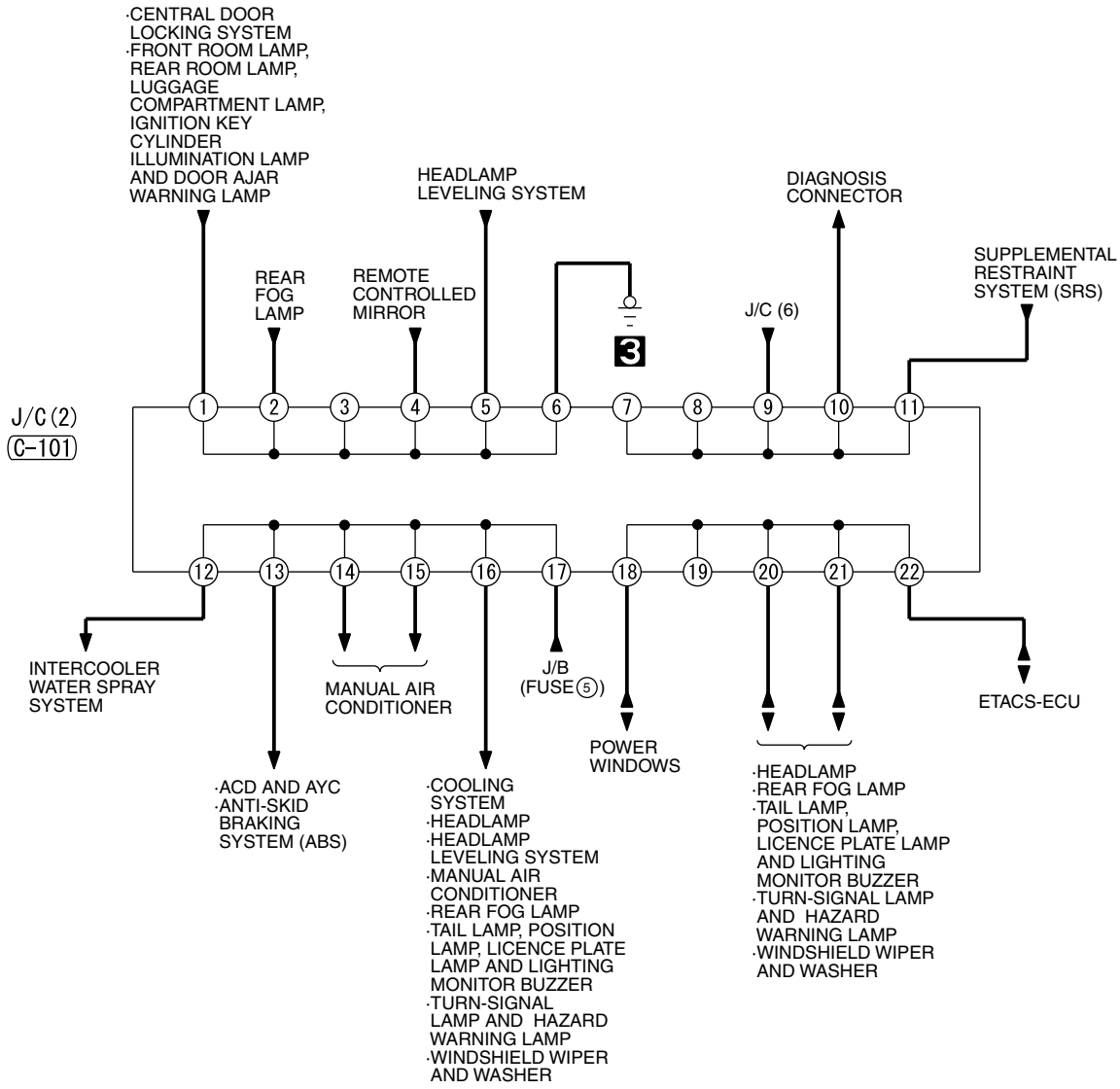
·CENTRAL DOOR LOCKING SYSTEM
·FRONT ROOM LAMP, REAR ROOM LAMP, LUGGAGE COMPARTMENT LAMP, IGNITION KEY CYLINDER ILLUMINATION LAMP AND DOOR AJAR WARNING LAMP
HEADLAMP LEVELING SYSTEM
DIAGNOSIS CONNECTOR
SUPPLEMENTAL RESTRAINT SYSTEM (SRS)
REAR FOG LAMP
REMOTE CONTROLLED MIRROR
J/C (6)
3
J/C (2)
C-101
1 2 3 4 5 6 7 8 9 10 11
12 13 14 15 16 17 18 19 20 21 22
INTERCOOLER WATER SPRAY SYSTEM
MANUAL AIR CONDITIONER
J/B (FUSE 5)
ETACS-ECU
POWER WINDOWS
·ACD AND AYC
·ANTI-SKID BRAKING SYSTEM (ABS)
·COOLING SYSTEM
·HEADLAMP
·HEADLAMP LEVELING SYSTEM
·MANUAL AIR CONDITIONER
·REAR FOG LAMP
·TAIL LAMP, POSITION LAMP, LICENCE PLATE LAMP AND LIGHTING MONITOR BUZZER
·TURN-SIGNAL LAMP AND HAZARD WARNING LAMP
·WINDSHIELD WIPER AND WASHER
·HEADLAMP
·REAR FOG LAMP
·TAIL LAMP, POSITION LAMP, LICENCE PLATE LAMP AND LIGHTING MONITOR BUZZER
·TURN-SIGNAL LAMP AND HAZARD WARNING LAMP
·WINDSHIELD WIPER AND WASHER

H4J00E05AB

J/C <LH drive vehicles> (CONTINUED)

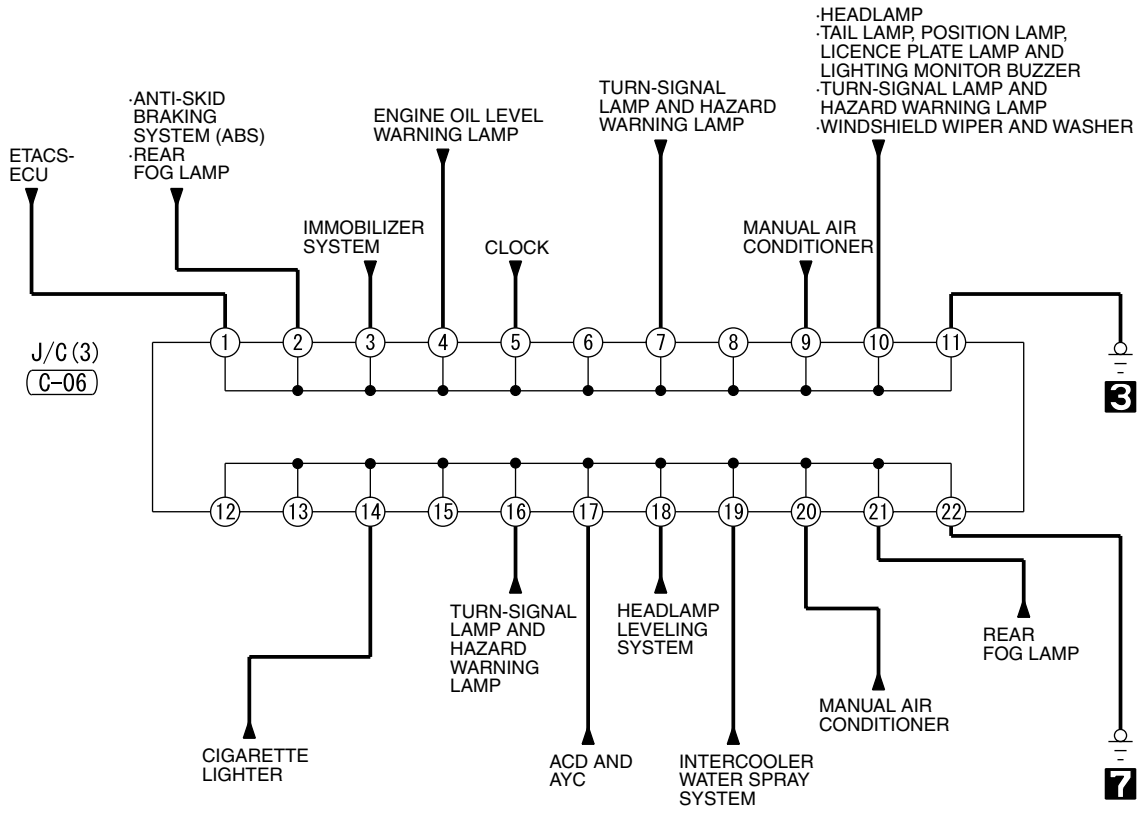

C-06

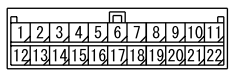

C-23

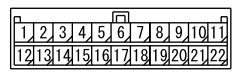

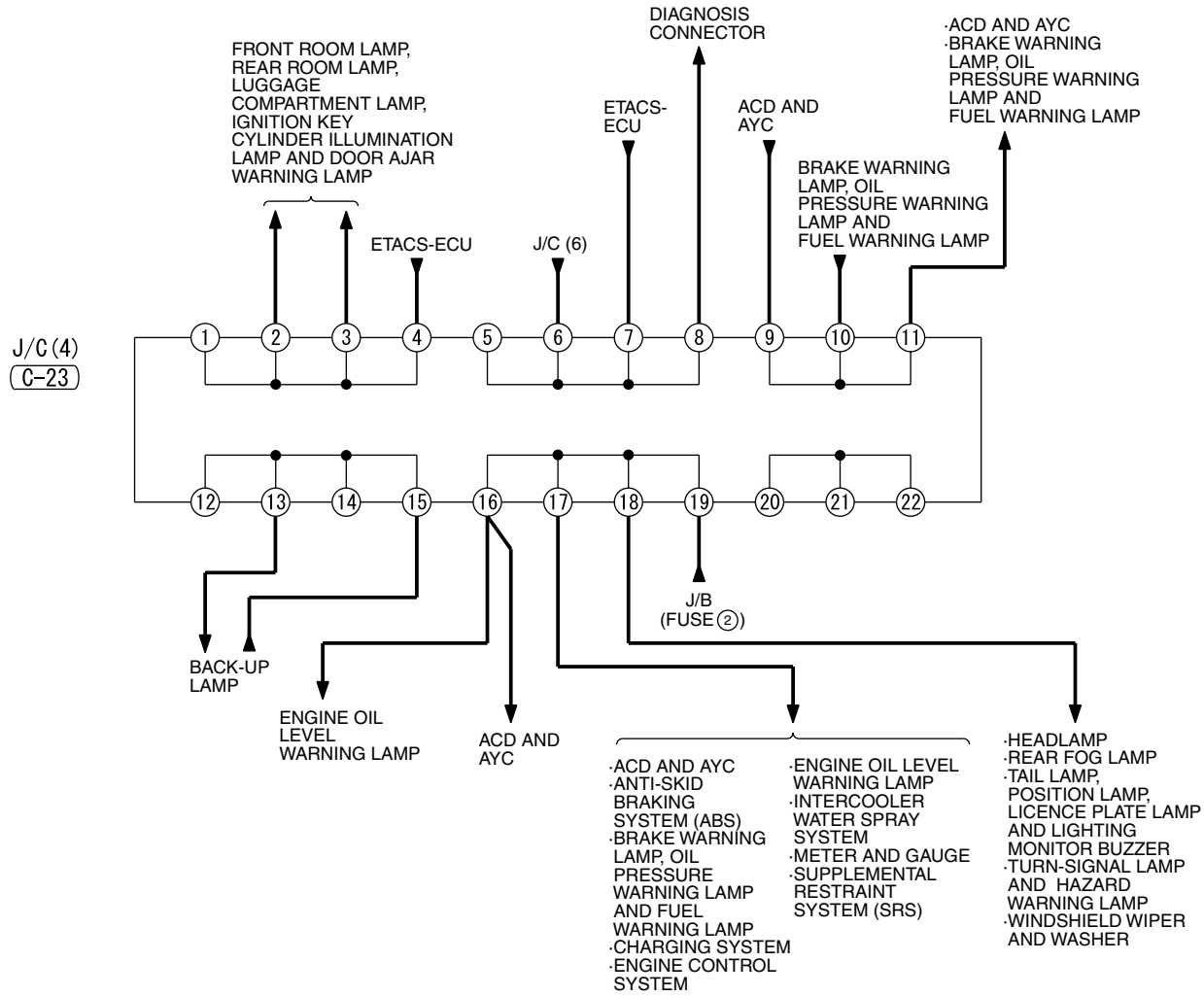
FRONT ROOM LAMP, REAR ROOM LAMP, LUGGAGE COMPARTMENT LAMP, IGNITION KEY CYLINDER ILLUMINATION LAMP AND DOOR AJAR WARNING LAMP
ETACS-ECU
J/C (6)
ETACS-ECU
DIAGNOSIS CONNECTOR
ACD AND AYC
BRAKE WARNING LAMP, OIL PRESSURE WARNING LAMP AND FUEL WARNING LAMP
·ACD AND AYC
·BRAKE WARNING LAMP, OIL PRESSURE WARNING LAMP AND FUEL WARNING LAMP
J/C (4)
C-23
1 2 3 4 5 6 7 8 9 10 11
12 13 14 15 16 17 18 19 20 21 22
J/B (FUSE ②)
BACK-UP LAMP
ENGINE OIL LEVEL WARNING LAMP
ACD AND AYC
·ACD AND AYC
·ANTI-SKID BRAKING SYSTEM (ABS)
·BRAKE WARNING LAMP, OIL PRESSURE WARNING LAMP AND FUEL WARNING LAMP
·CHARGING SYSTEM
·ENGINE CONTROL SYSTEM
·ENGINE OIL LEVEL WARNING LAMP
·INTERCOOLER WATER SPRAY SYSTEM
·METER AND GAUGE
·SUPPLEMENTAL RESTRAINT SYSTEM (SRS)
·HEADLAMP
·REAR FOG LAMP
·TAIL LAMP, POSITION LAMP, LICENCE PLATE LAMP AND LIGHTING
MONITOR BUZZER
·TURN-SIGNAL LAMP AND HAZARD WARNING LAMP
·WINDSHIELD WIPER AND WASHER

H4J00E05BB

J/C <LH drive vehicles> (CONTINUED)

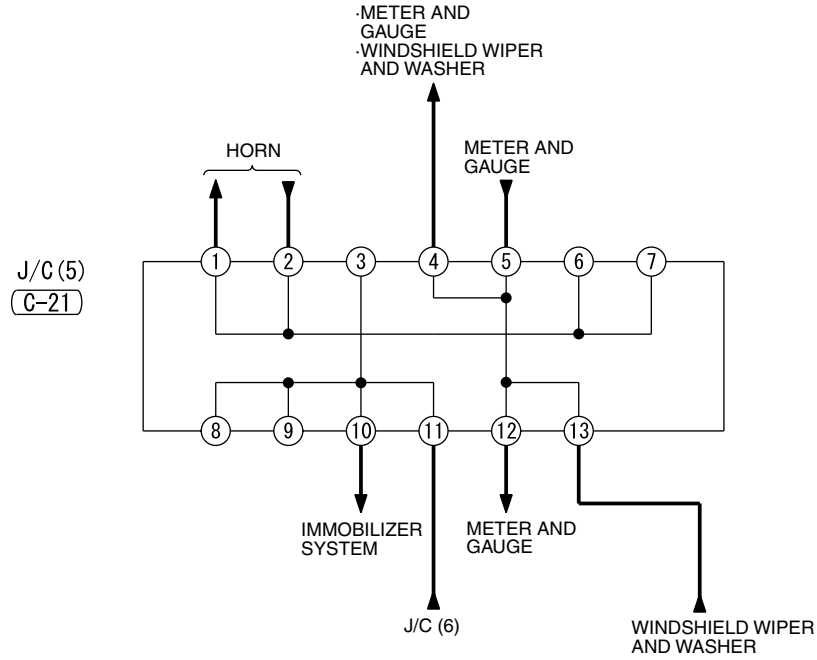

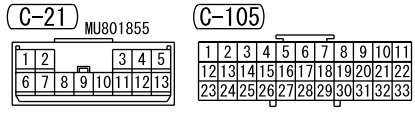

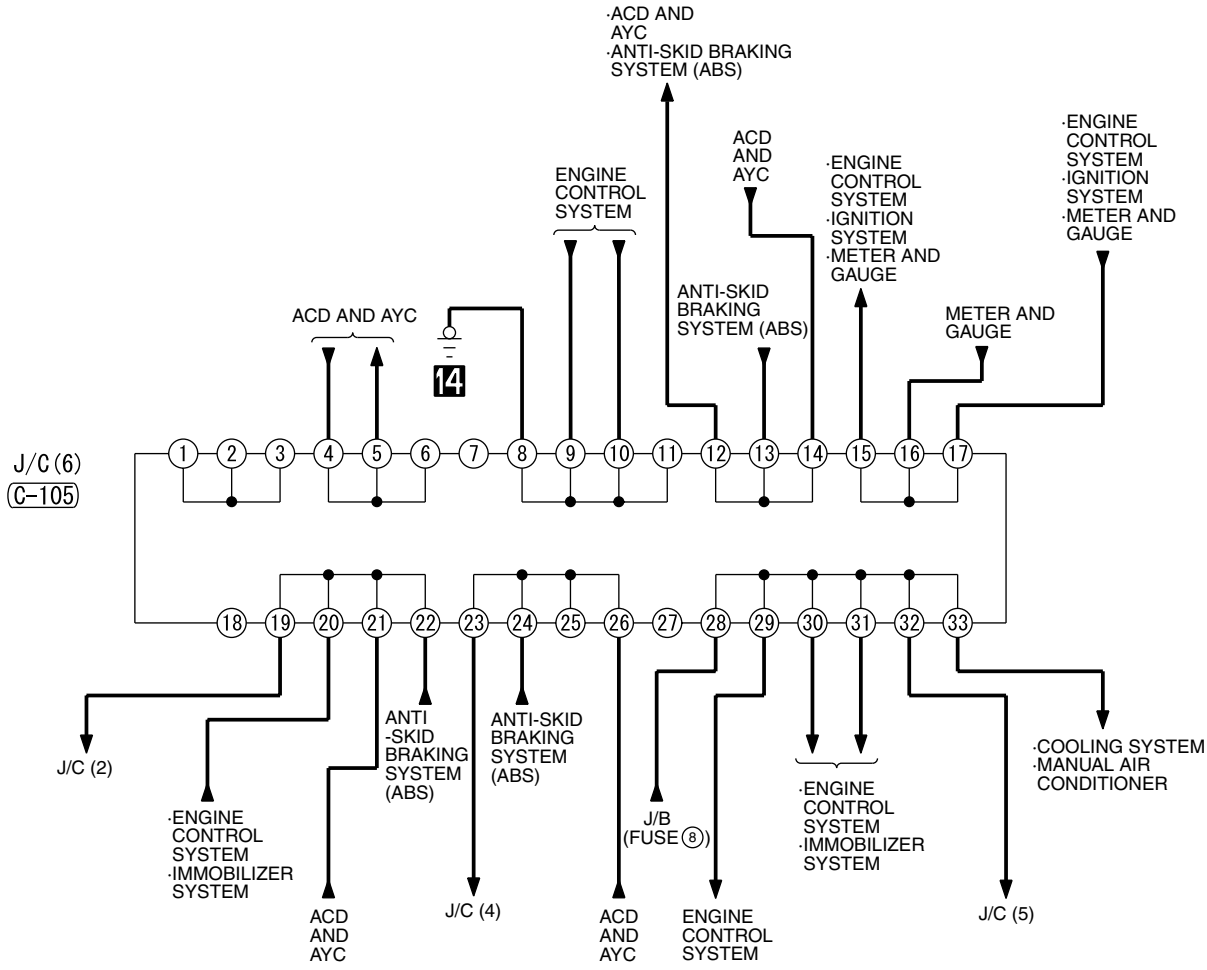
·ACD AND AYC
·ANTI-SKID BRAKING SYSTEM (ABS)
ACD AND AYC
·ENGINE CONTROL SYSTEM
·IGNITION SYSTEM
·METER AND GAUGE
·ENGINE CONTROL SYSTEM
·IGNITION SYSTEM
·METER AND GAUGE
ENGINE CONTROL SYSTEM
ANTI-SKID BRAKING SYSTEM (ABS)
METER AND GAUGE
ACD AND AYC
14
J/C (6)
C-105
1 2 3 4 5 6 7 8 9 10 11 12 13 14 15 16 17
18 19 20 21 22 23 24 25 26 27 28 29 30 31 32 33
J/C (2)
·ENGINE CONTROL SYSTEM
·IMMOBILIZER SYSTEM
ANTI-SKID BRAKING SYSTEM (ABS)
ANTI-SKID BRAKING SYSTEM (ABS)
J/B (FUSE 8)
·ENGINE CONTROL SYSTEM
·IMMOBILIZER SYSTEM
·COOLING SYSTEM
·MANUAL AIR CONDITIONER
ACD AND AYC
J/C (4)
ACD AND AYC
ENGINE CONTROL SYSTEM
J/C (5)

J/C <RH drive vehicles>

M3030014200536

NOTE: IN ACTUAL VEHICLES, ANY OF THE TERMINALS CONNECTED IN J/C ARE USED. THE TERMINAL ARRANGEMENT DESCRIBED IN THE CIRCUIT DIAGRAM MAY NOT BE IDENTICAL TO THOSE OF THE VEHICLES.

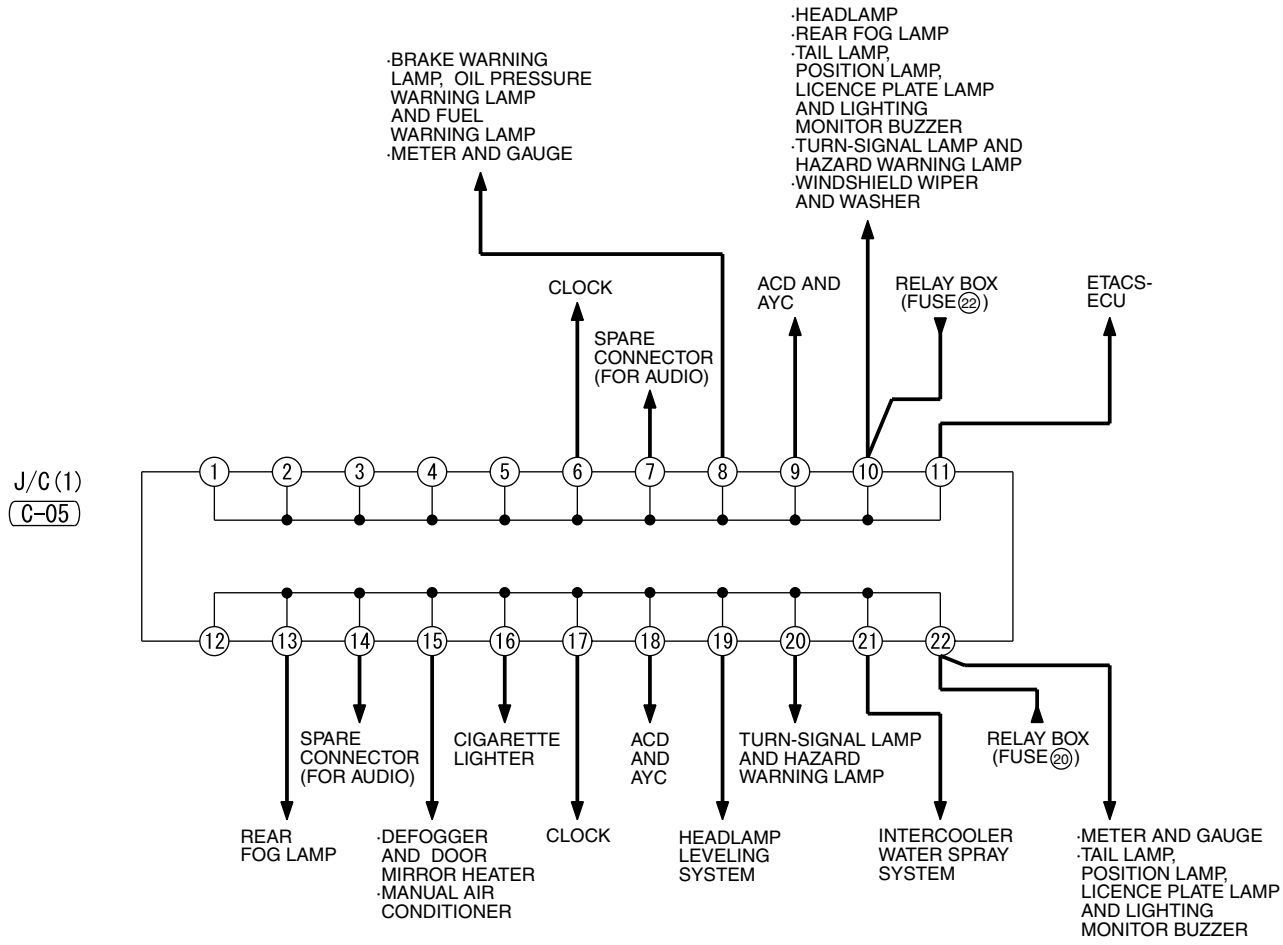

C-05

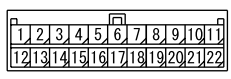

C-101

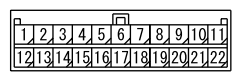

H4J00E06AA

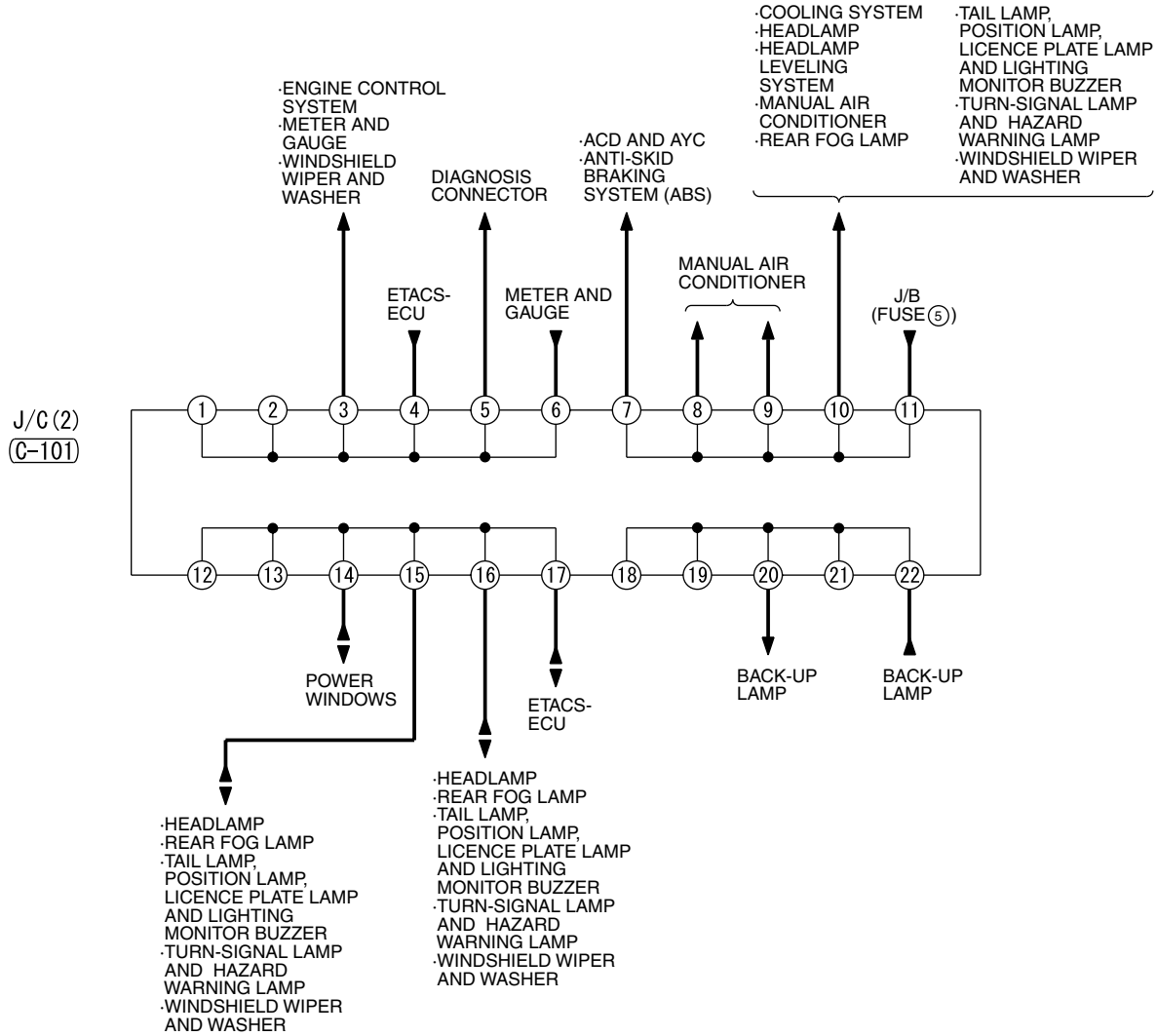
·COOLING SYSTEM
·HEADLAMP
·HEADLAMP LEVELING SYSTEM
·MANUAL AIR CONDITIONER
·REAR FOG LAMP
·TAIL LAMP, POSITION LAMP, LICENCE PLATE LAMP AND LIGHTING MONITOR BUZZER
·TURN-SIGNAL LAMP AND HAZARD WARNING LAMP
·WINDSHIELD WIPER AND WASHER
·ENGINE CONTROL SYSTEM
·METER AND GAUGE
·WINDSHIELD WIPER AND WASHER
DIAGNOSIS CONNECTOR
·ACD AND AYC
·ANTI-SKID BRAKING SYSTEM (ABS)
MANUAL AIR CONDITIONER
ETACS-ECU
METER AND GAUGE
J/B (FUSE 5)
J/C (2)
C-101
1 2 3 4 5 6 7 8 9 10 11
12 13 14 15 16 17 18 19 20 21 22
POWER WINDOWS
ETACS-ECU
BACK-UP LAMP
BACK-UP LAMP
·HEADLAMP
·REAR FOG LAMP
·TAIL LAMP, POSITION LAMP, LICENCE PLATE LAMP AND LIGHTING MONITOR BUZZER
·TURN-SIGNAL LAMP AND HAZARD WARNING LAMP
·WINDSHIELD WIPER AND WASHER
·HEADLAMP
·REAR FOG LAMP
·TAIL LAMP, POSITION LAMP, LICENCE PLATE LAMP AND LIGHTING MONITOR BUZZER
·TURN-SIGNAL LAMP AND HAZARD WARNING LAMP
·WINDSHIELD WIPER AND WASHER

H4J00E06AB

J/C <RH drive vehicles> (CONTINUED)

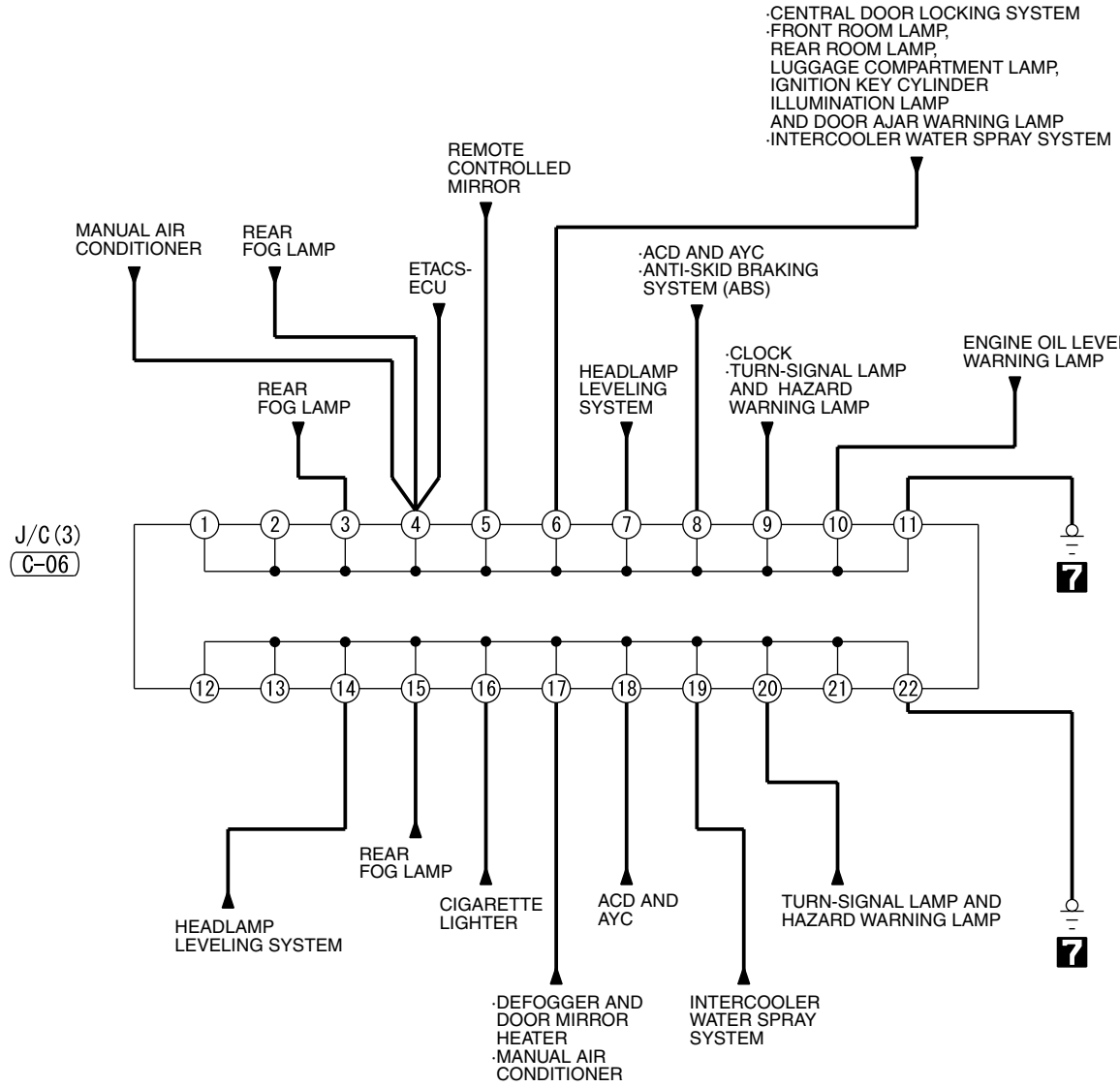

C-06

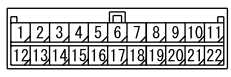

C-23

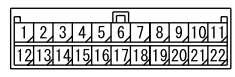

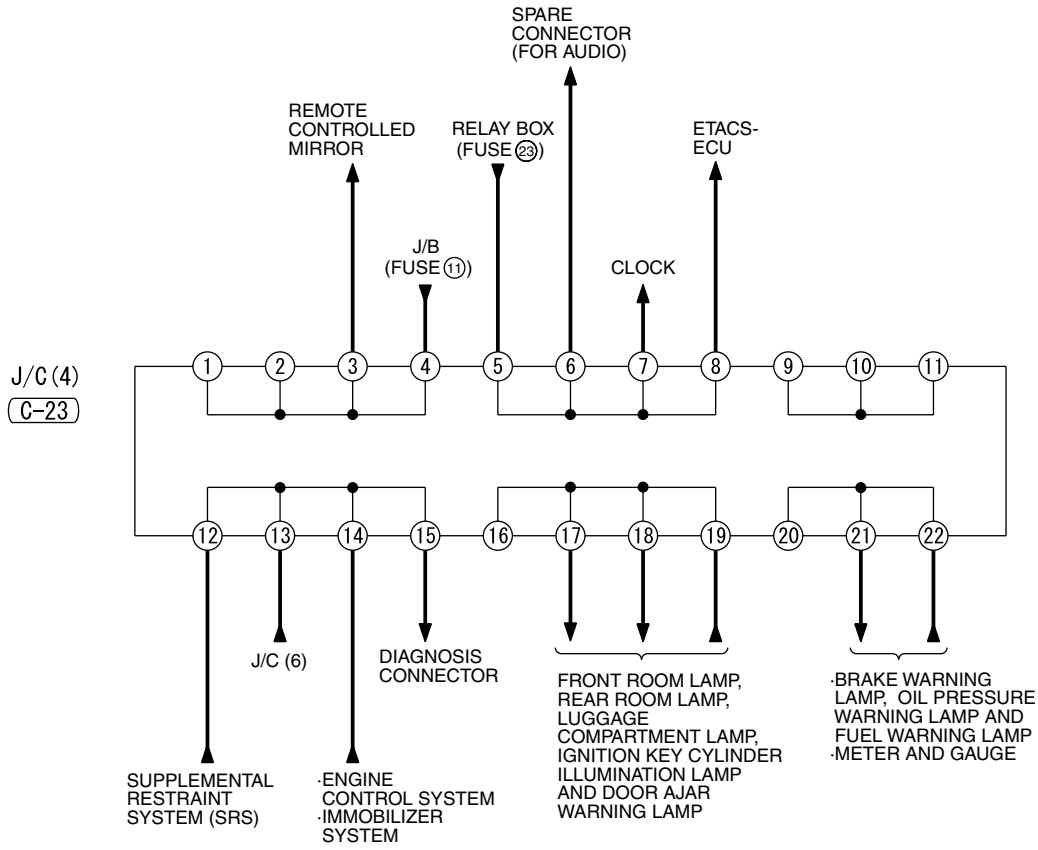
SPARE CONNECTOR (FOR AUDIO)
REMOTE CONTROLLED MIRROR
RELAY BOX (FUSE 23)
ETACS-ECU
J/B (FUSE 11)
CLOCK
J/C (4)
C-23
1
2
3
4
5
6
7
8
9
10
11
12
13
14
15
16
17
18
19
20
21
22
J/C (6)
DIAGNOSIS CONNECTOR
FRONT ROOM LAMP, REAR ROOM LAMP, LUGGAGE COMPARTMENT LAMP, IGNITION KEY CYLINDER ILLUMINATION LAMP AND DOOR AJAR WARNING LAMP
·BRAKE WARNING LAMP, OIL PRESSURE WARNING LAMP AND FUEL WARNING LAMP
·METER AND GAUGE
SUPPLEMENTAL RESTRAINT SYSTEM (SRS)
·ENGINE CONTROL SYSTEM
·IMMOBILIZER SYSTEM

J/C <RH drive vehicles> (CONTINUED)

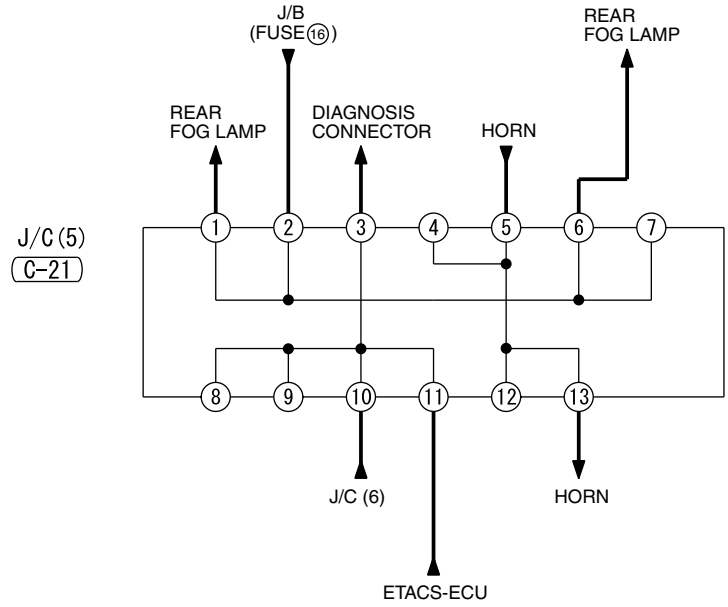

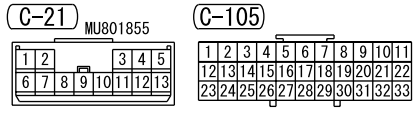

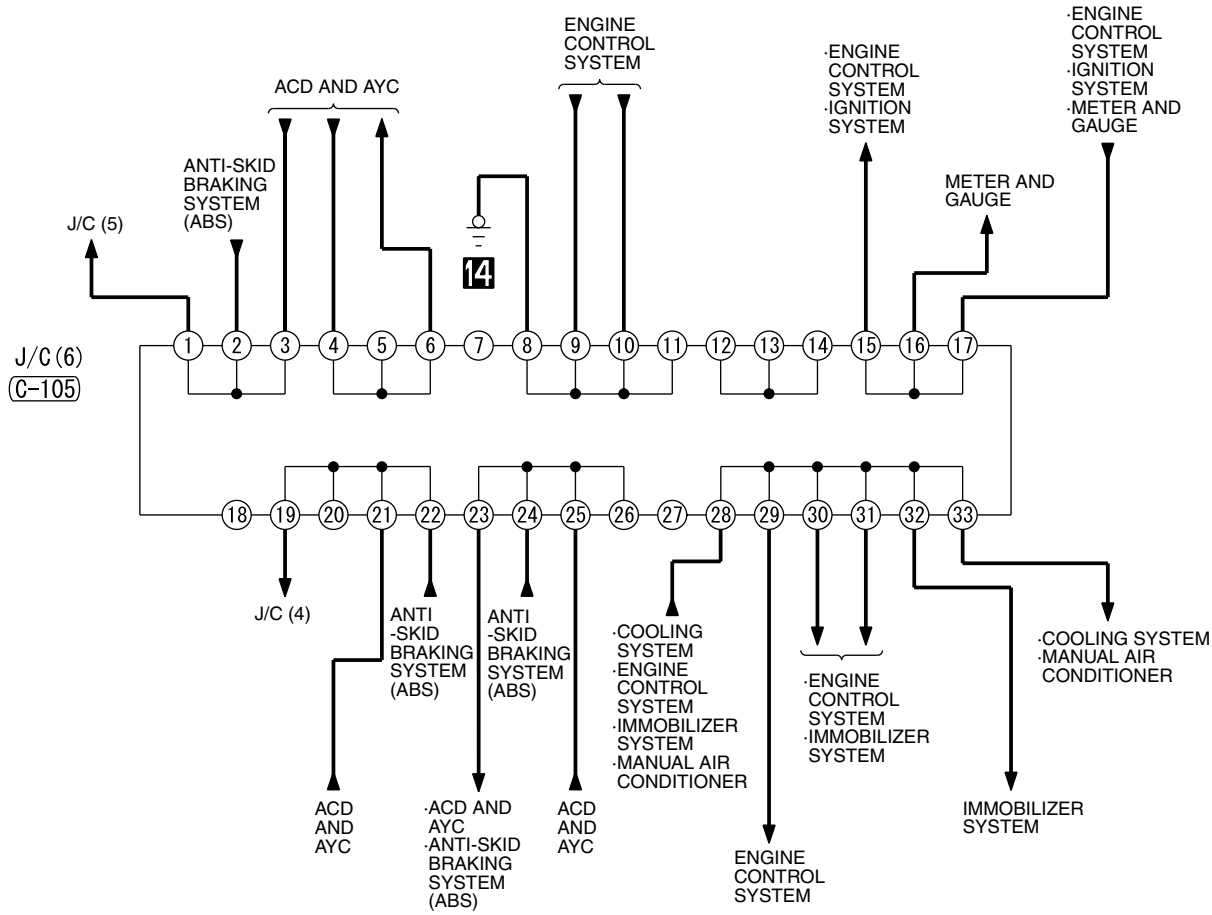
J/C (5)
ANTI-SKID BRAKING SYSTEM (ABS)
ACD AND AYC
ENGINE CONTROL SYSTEM
·ENGINE CONTROL SYSTEM
·IGNITION SYSTEM
METER AND GAUGE
·ENGINE CONTROL SYSTEM
·IGNITION SYSTEM
·METER AND GAUGE
14
J/C (6)
C-105
1 2 3 4 5 6 7 8 9 10 11 12 13 14 15 16 17
18 19 20 21 22 23 24 25 26 27 28 29 30 31 32 33
J/C (4)
ANTI -SKID BRAKING SYSTEM (ABS)
ANTI -SKID BRAKING SYSTEM (ABS)
·COOLING SYSTEM
·ENGINE CONTROL SYSTEM
·IMMOBILIZER SYSTEM
·MANUAL AIR CONDITIONER
·ENGINE CONTROL SYSTEM
·IMMOBILIZER SYSTEM
·COOLING SYSTEM
·MANUAL AIR CONDITIONER
ACD AND AYC
·ACD AND AYC
·ANTI-SKID BRAKING SYSTEM (ABS)
ACD AND AYC
ENGINE CONTROL SYSTEM
IMMOBILIZER SYSTEM

CENTRALIZED JUNCTION

M3030000300530

FUSIBLE LINK AND FUSE

ENGINE COMPARTMENT

No.	Power supply circuit	Name	Rated capacity (A)	Housing colour	Load circuit
1	Battery	Fusible link	60	Yellow	Fuse No.15, 16, 19, 20 (in junction block) circuit
2			50	Red	Fan controller
3			60	Yellow	ABS-ECU
4			40	Green	Ignition switch circuit
5			40	Green	Fuse No.21 (in junction block) circuit, power window main switch and power window sub switch
6		Fuse	15	Blue	–
7			10	Red	Horn and horn relay
8			20	Yellow	Engine control relay, engine-ECU and ignition coil
9			10	Red	A/C compressor
10			15	Blue	ABS-ECU, high-mounted stop lamp, rear combination lamp and 4WD-ECU
11			30	Green	Condenser fan motor
12			7.5	Brown	Alternator
13			10	Red	ETACS-ECU
14			–	–	–
15			20	Yellow	Fuel pump relay, fuel pump and gauge unit and fuel pump resistor
16	Front-ECU (Headlamp relay: HI)		10	Red	Headlamp
17			10	Red	Headlamp and high beam indicator lamp
18	Front-ECU (Headlamp relay: LO)		10	Red	Headlamp assembly
19			10	Red	Headlamp assembly and headlamp leveling switch
20	Front-ECU (Tail lamp relay)		7.5	Brown	A/C-ECU, ACD mode changeover switch, ashtray illumination lamp, cigarette lighter illumination lamp, clock, combination meter, fog lamp switch, hazard warning switch, headlamp assembly, headlamp leveling switch, intercooler water spray switch, rear combination lamp and spare connector (for audio)
21			7.5	Brown	Combination meter, headlamp assembly, licence plate lamp and rear combination lamp

No.	Power supply circuit	Name	Rated capacity (A)	Housing colour	Load circuit
22	Battery		10	Red	Clock, column switch, combination meter, ETACS-ECU, front-ECU, spare connector (for audio) and 4WD-ECU
23	Ignition switch (ACC)		10	Red	Clock, ETACS-ECU and spare connector (for audio)
24	–		–	–	–
25	Battery		30	Green	Condenser fan motor
26	Alternator	Fusible link	100	–	Battery
27	Battery		60	–	Electric pump

(Relay box in engine compartment)

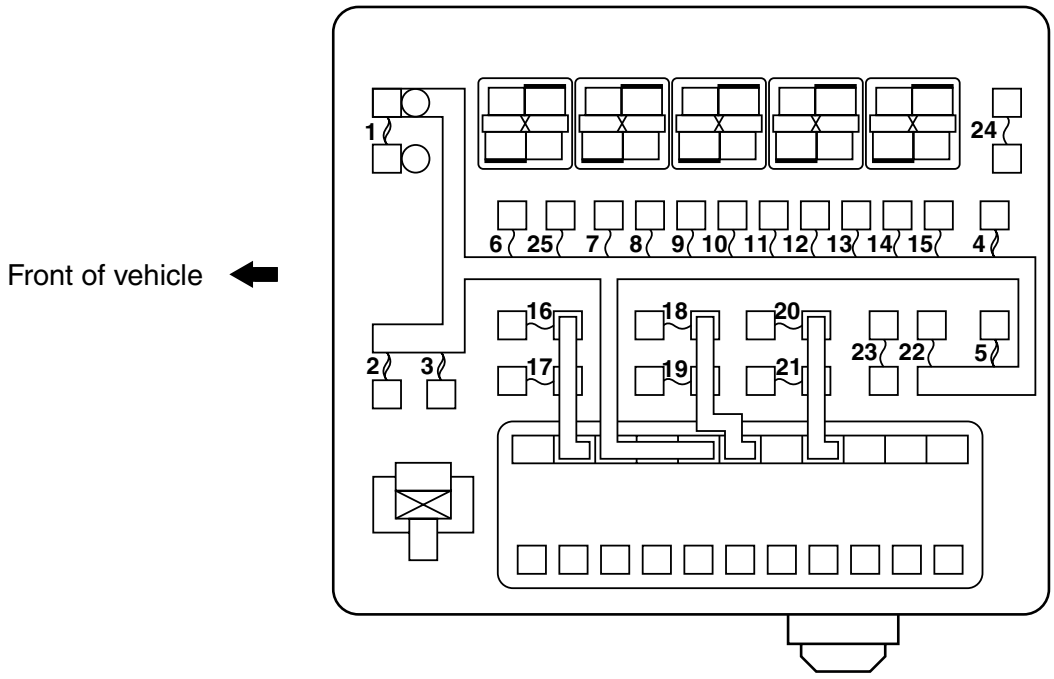

(Connected directly to battery positive terminal)

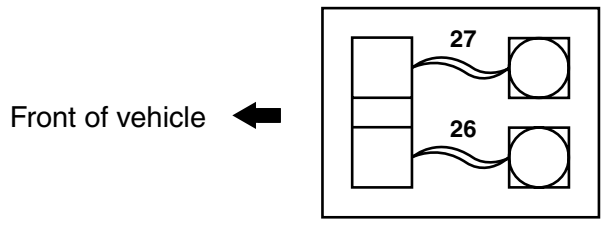

AC310556 AB

PASSENGER COMPARTMENT

No.	Power supply circuit	Name	Rated capacity (A)	Housing colour	Load circuit
1	Ignition switch (IG1)	Fuse	10	Red	Ignition coil and ignition coil relay
2			7.5	Brown	Column switch, combination meter, engine oil level relay, ETACS-ECU, SRS-ECU, vehicle speed sensor and 4WD-ECU
3			7.5	Brown	Rear combination lamp and SRS-ECU
4			7.5	Brown	–
5	Ignition switch (IG2)		7.5	Brown	A/C compressor relay, A/C-ECU, blower relay, condenser fan relay, defogger relay, front-ECU, Intercooler water spray and outside/inside air selection damper control motor
6	Defogger relay		7.5	Brown	Remote controlled mirror
7	Ignition switch (ACC)		20	Yellow	Front-ECU and windshield wiper motor
8	Ignition switch (IG1)		7.5	Brown	Engine-ECU, fuel pump relay (1) and fuel pump relay (2)
9	Ignition switch (ACC)		15	Blue	Cigarette lighter
10			–	–	–
11			7.5	Brown	Remote controlled mirror switch
12	Ignition switch (IG2)		7.5	Brown	ABS-ECU, G sensor and 4WD-ECU
13	Ignition switch (ACC)		–	–	–
14			15	Blue	ETACS-ECU
15	Fusible link No.1		15	Blue	Diagnosis connector
16			10	Red	Combination meter, rear fog lamp indicator lamp and rear fog lamp relay
17			–	–	–
18			–	–	–
19			30	Green	Blower motor and resistor
20			30	Green	Defogger
21	Fusible link No.5		20	Yellow	–
22	–		–	–	–
23	Ignition switch (IG2)		10	Red	Intercooler water spray motor
24	–		–	–	–

(In junction block)

<L.H. drive vehicles>

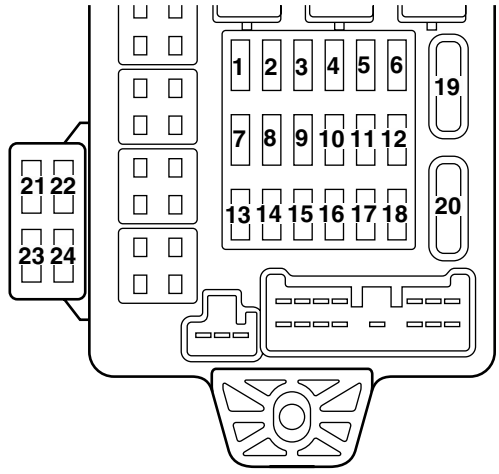

<R.H. drive vehicles>

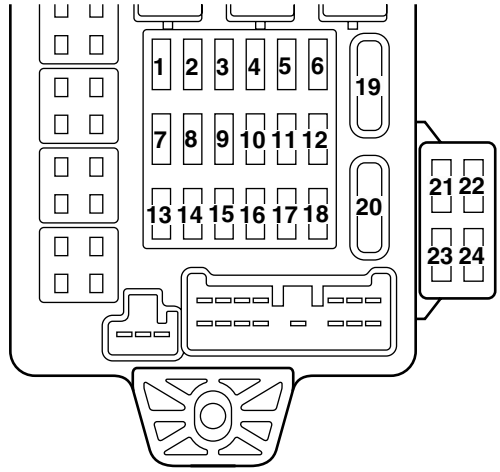

AC310557AB

CENTRALIZED RELAY

Connector No.	Name	Connector No.	Name
A-04X	–	B-06X	Engine speed detection connector
A-05X	Horn relay	B-07X	–
A-06X	Condenser fan relay (LO)	B-08X	–
A-07X	Condenser fan relay (HI)	B-09X	–
A-08X	–	B-10X	Ignition coil relay
A-09X	Fan control relay	B-11X	–
A-10X	Front-ECU	B-12X	Engine control relay
A-11X	Front-ECU	B-13X	A/C compressor relay

(Relay box in engine compartment)

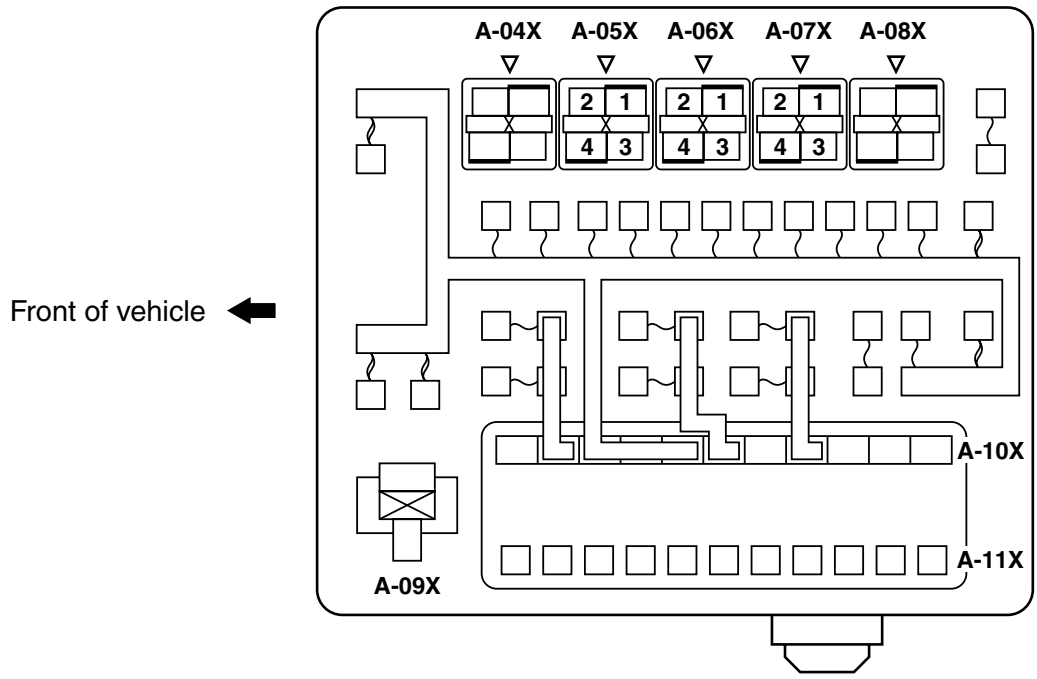

AC208462 AU

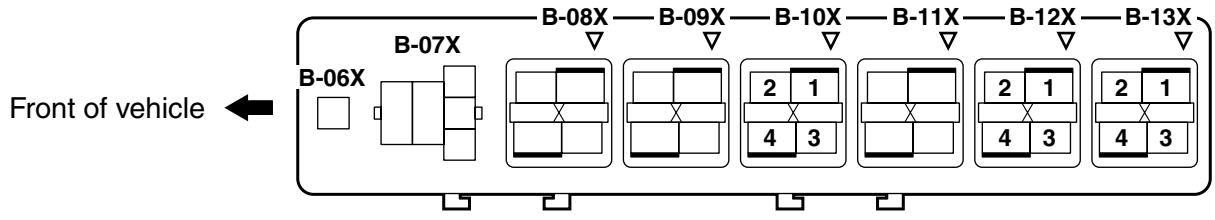

AC208464 AO

NOTE:

- *The triangle mark on the relay housing should face that on the J/B and the relay box.*

NOTES

POWER DISTRIBUTION SYSTEM

POWER DISTRIBUTION SYSTEM <LH drive vehicles>

M3030000400656

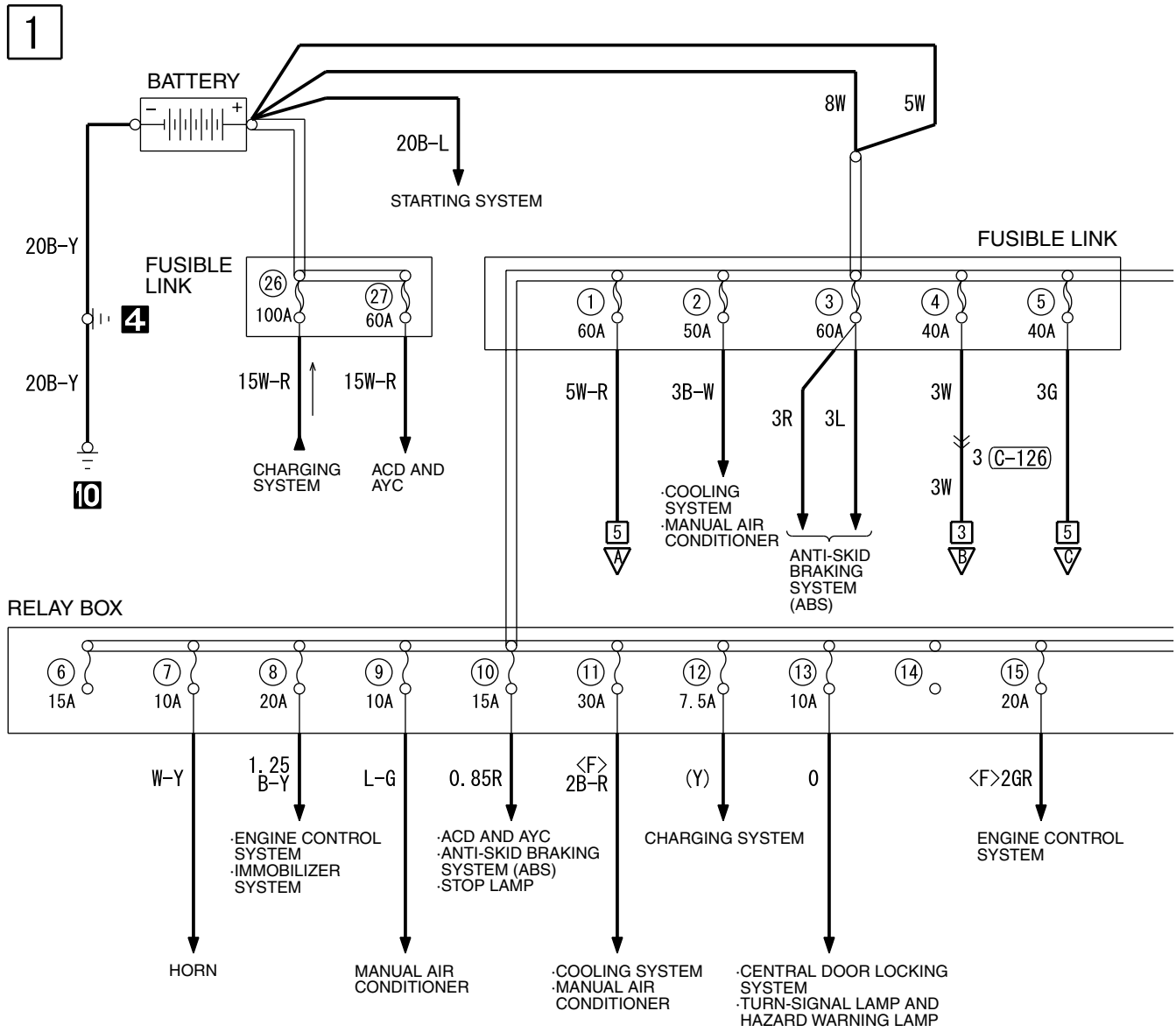

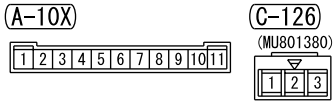

H4J01E03AA

2

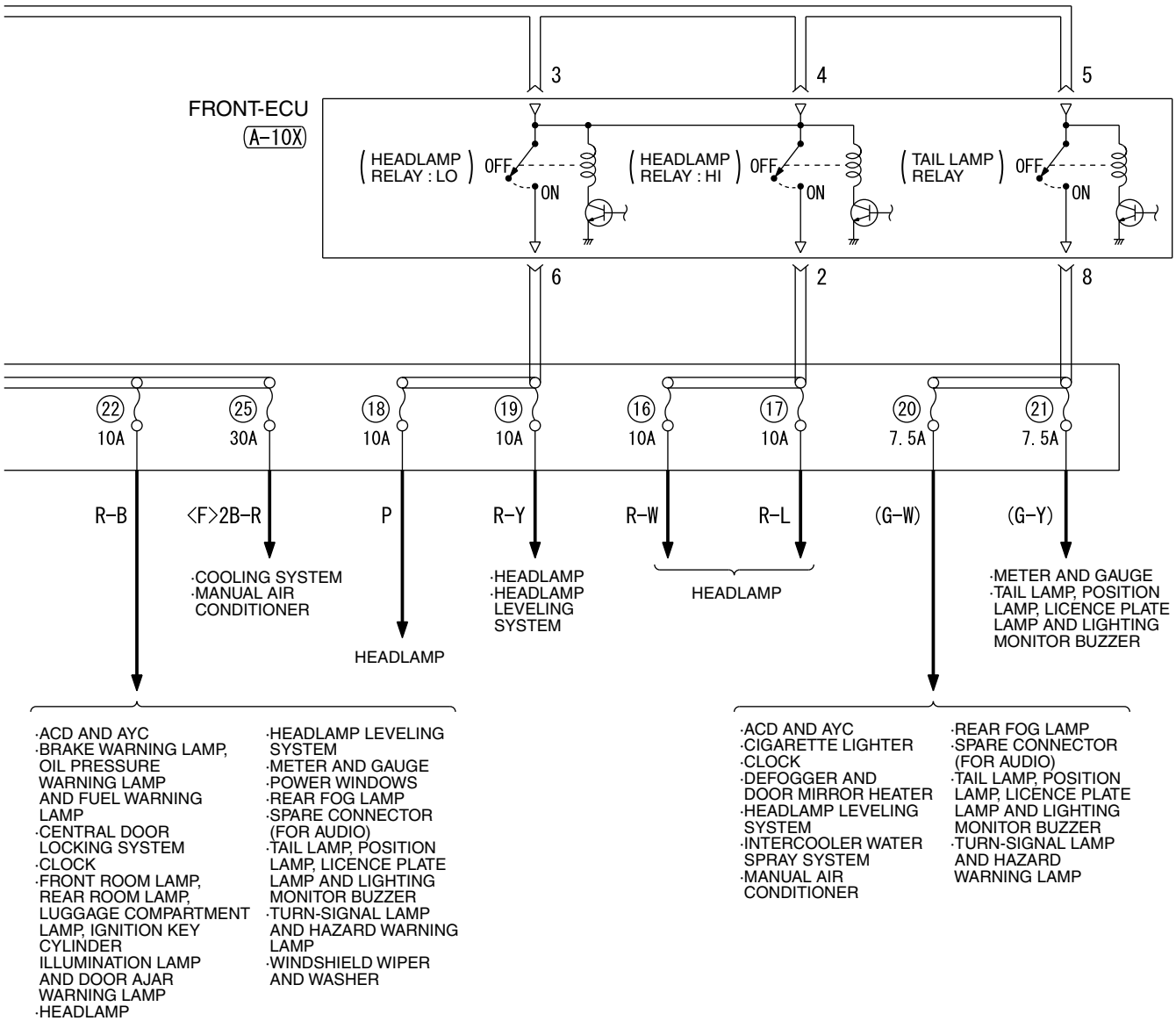

Wire colour code
B : Black LG : Light green G : Green L : Blue W : White Y : Yellow SB : Sky blue
BR : Brown O : Orange GR : Gray R : Red P : Pink V : Violet

H4J01E03AB

POWER DISTRIBUTION SYSTEM <LH drive vehicles> (CONTINUED)

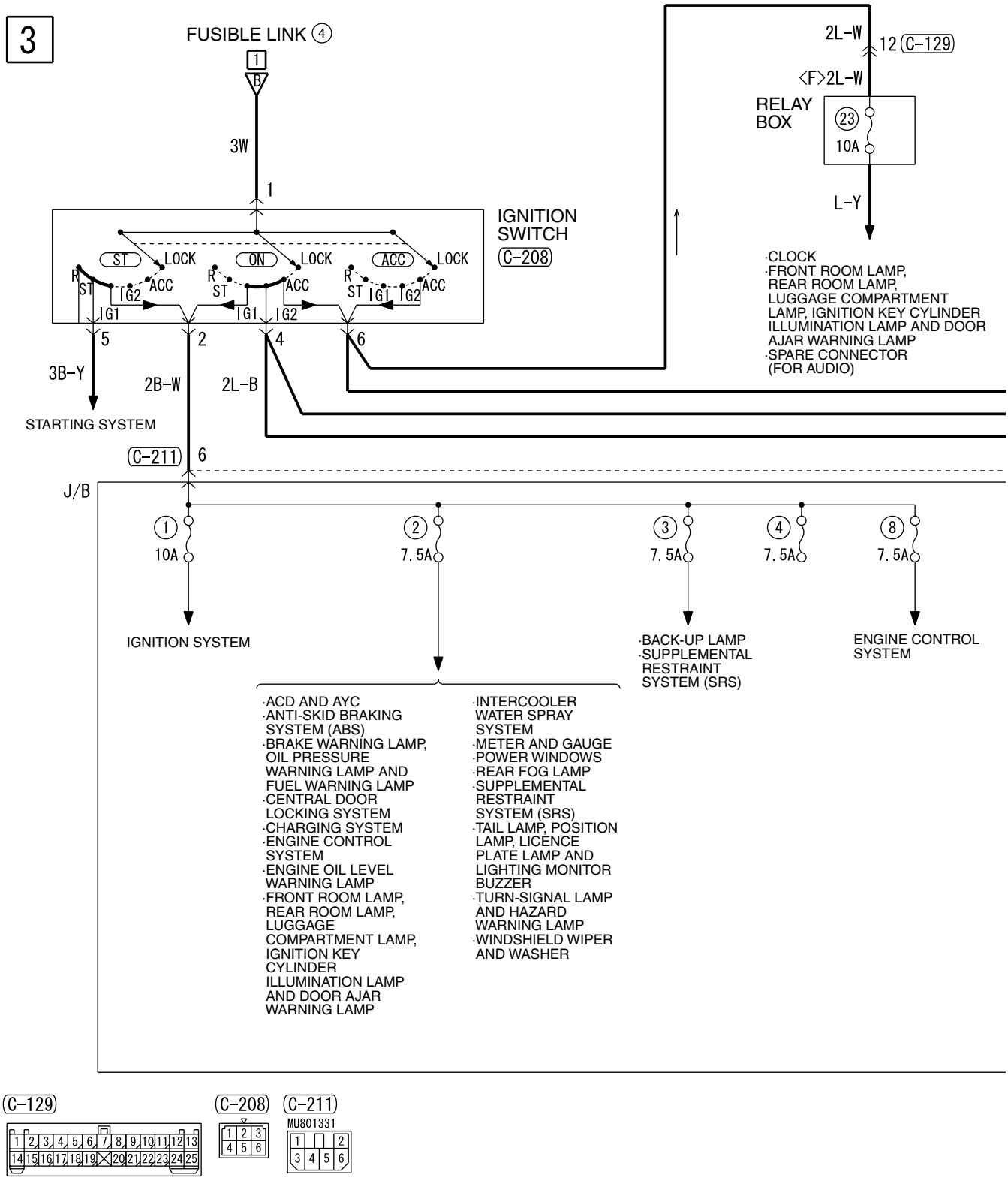

H4J01E03BA

4

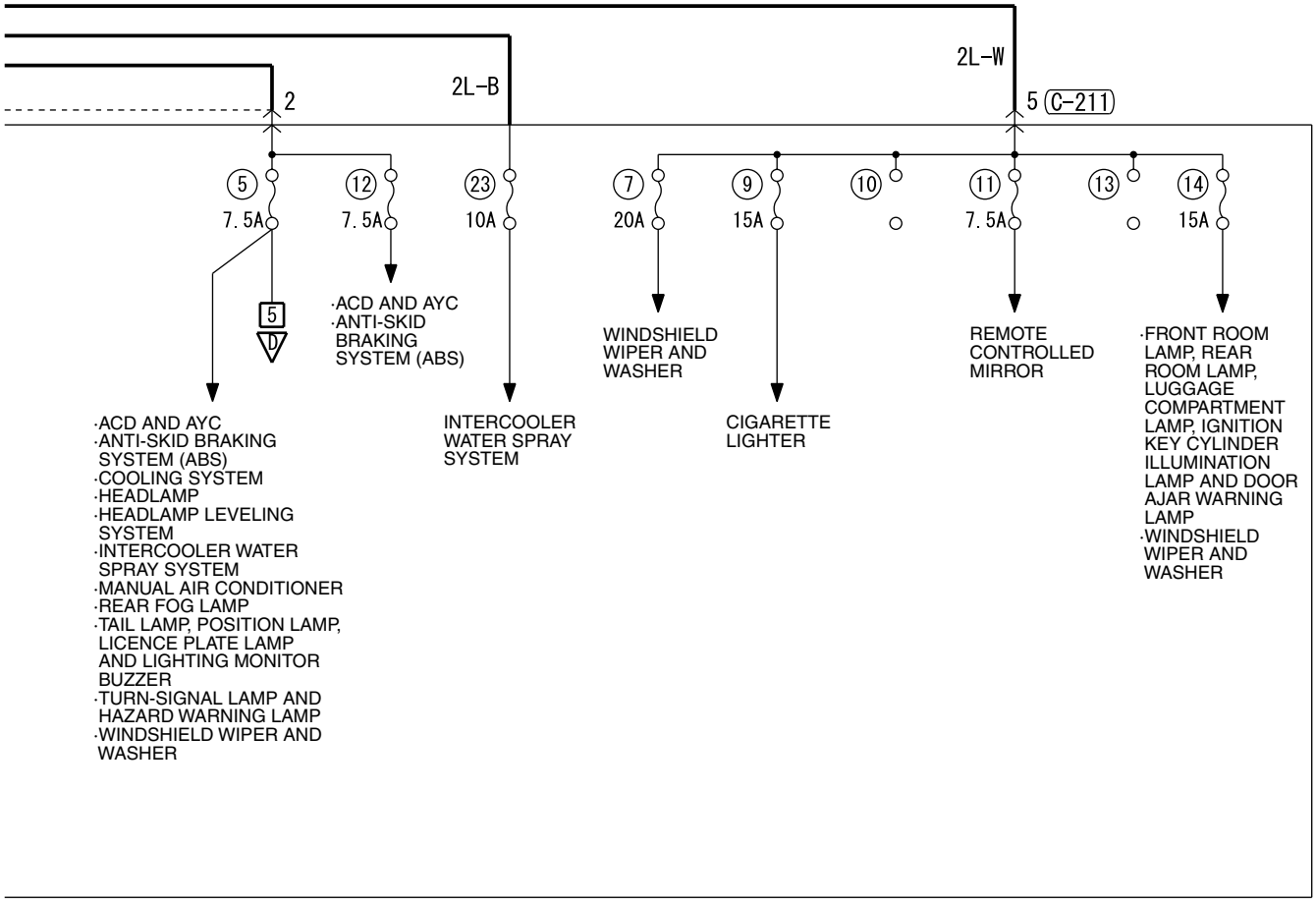

Wire colour code
B : Black LG : Light green G : Green L : Blue W : White Y : Yellow SB : Sky blue
BR : Brown O : Orange GR : Gray R : Red P : Pink V : Violet

H4J01E03BB

POWER DISTRIBUTION SYSTEM <LH drive vehicles> (CONTINUED)

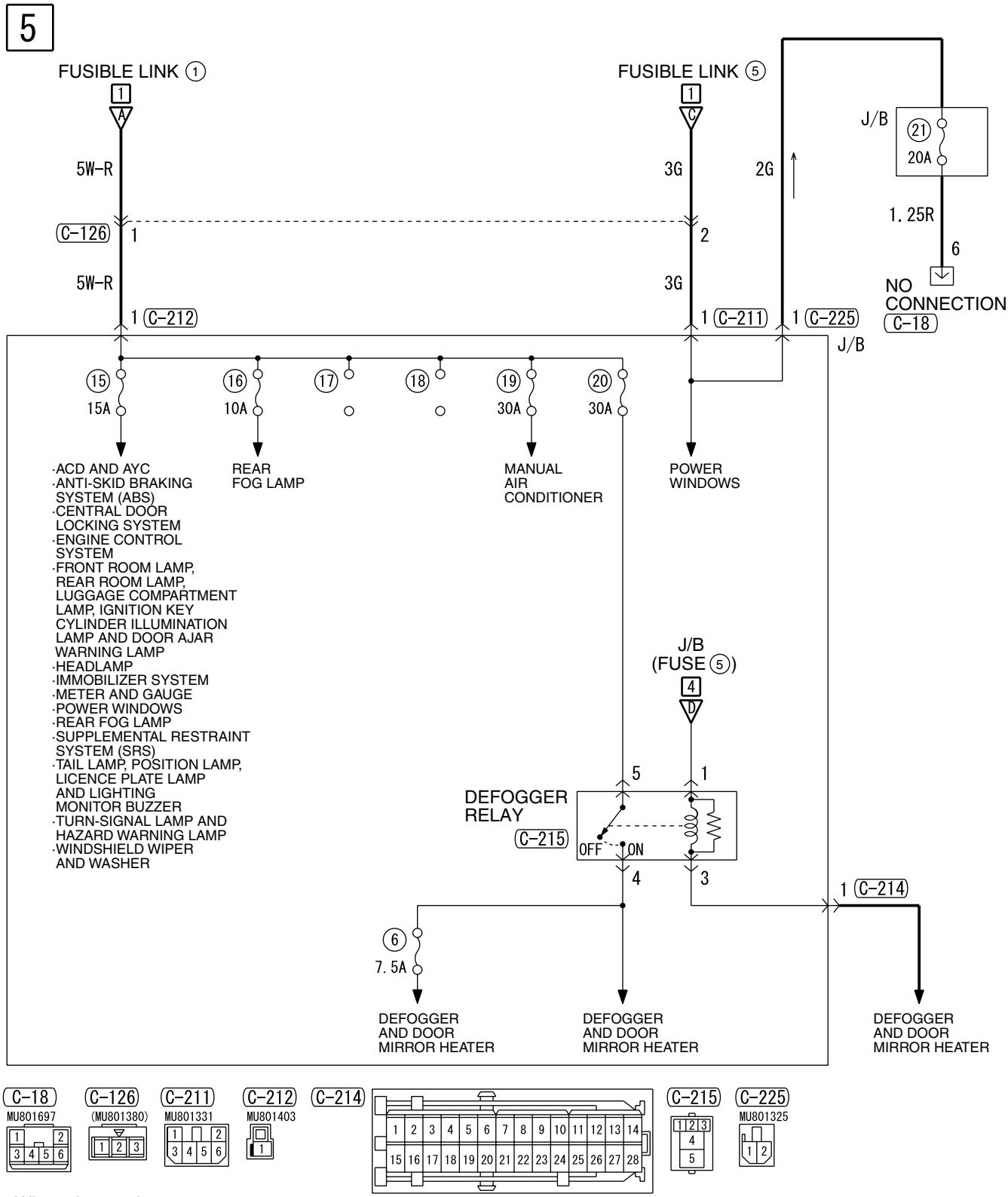

Wire colour code
B : Black LG : Light green G : Green L : Blue W : White Y : Yellow SB : Sky blue
BR : Brown O : Orange GR : Gray R : Red P : Pink V : Violet

H4J01E03CA

NOTES

POWER DISTRIBUTION SYSTEM <RH drive vehicles>

M3030000400667

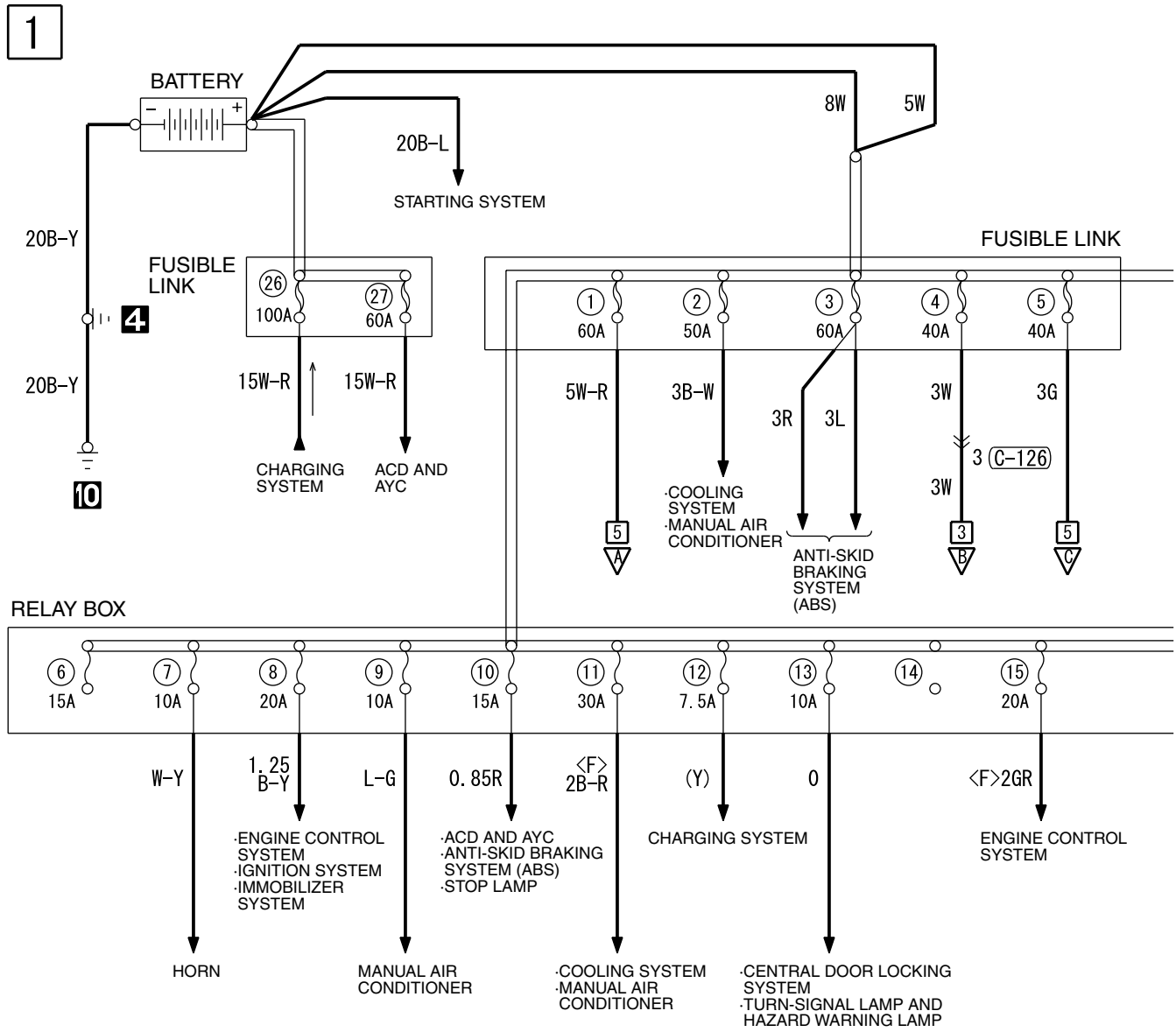

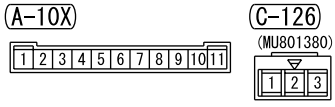

H4J01E04AA

2

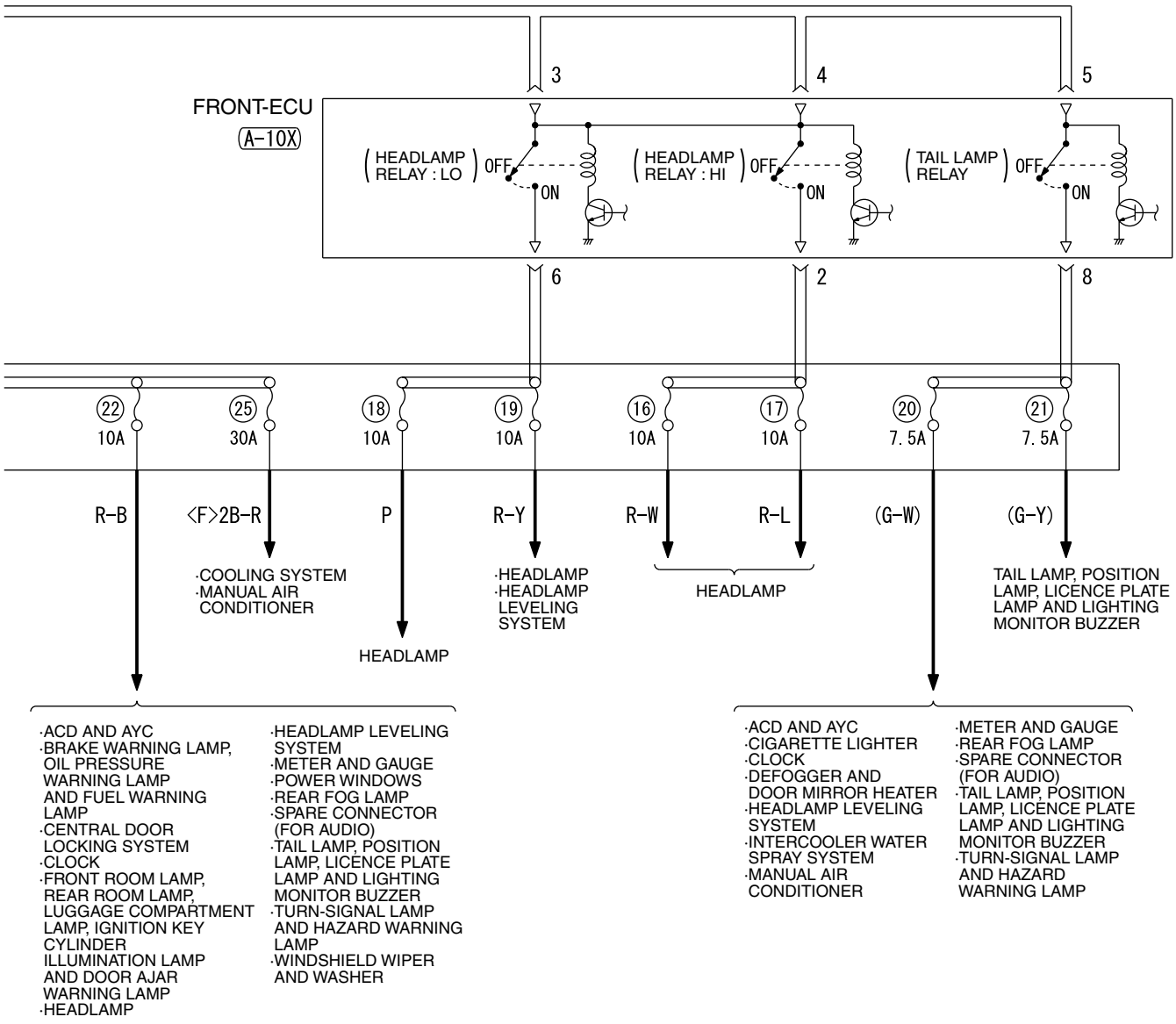

Wire colour code
B : Black LG : Light green G : Green L : Blue W : White Y : Yellow SB : Sky blue
BR : Brown O : Orange GR : Gray R : Red P : Pink V : Violet

H4J01E04AB

POWER DISTRIBUTION SYSTEM <RH drive vehicles> (CONTINUED)

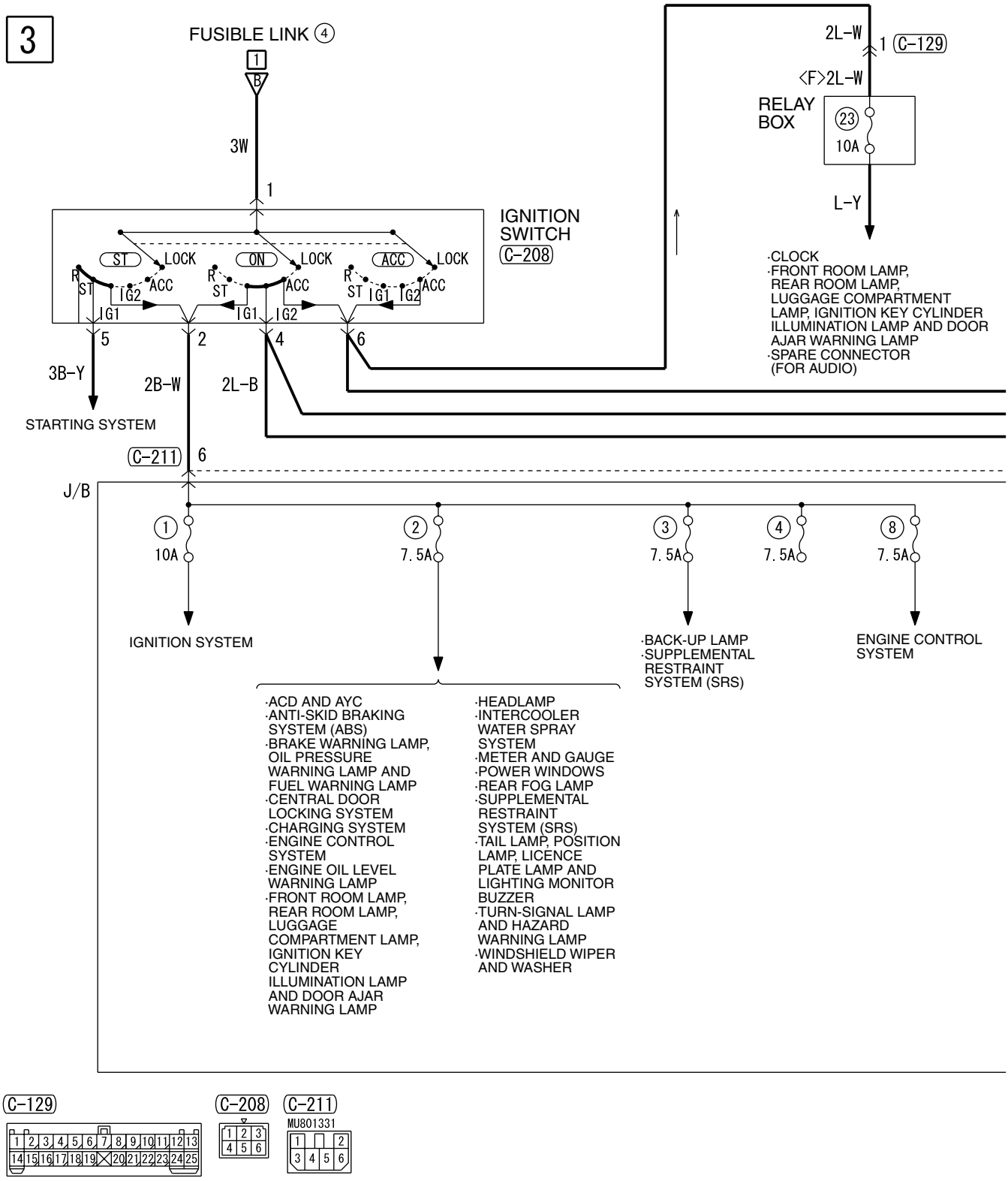

H4J01E04BA

4

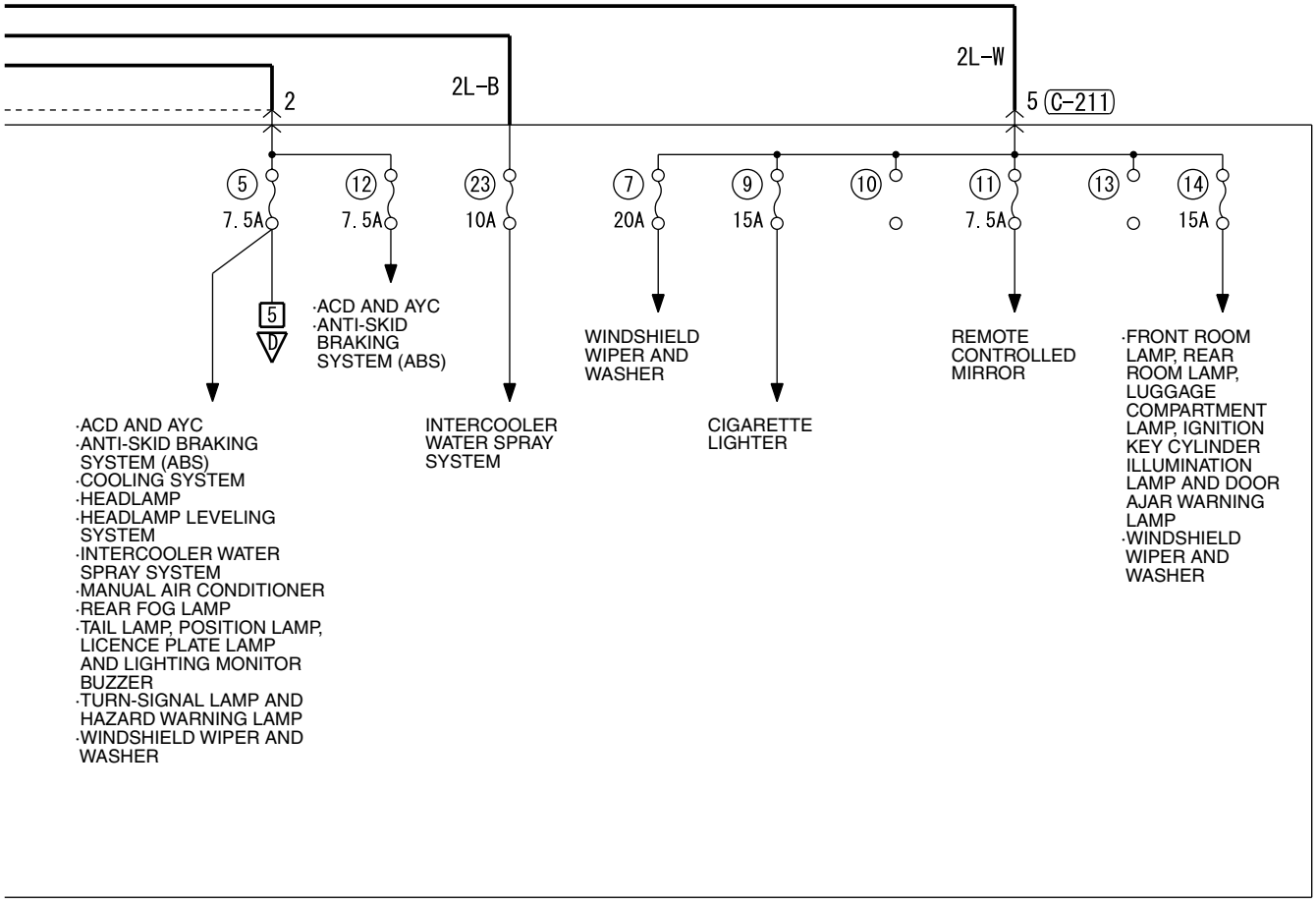

Wire colour code
B : Black LG : Light green G : Green L : Blue W : White Y : Yellow SB : Sky blue
BR : Brown O : Orange GR : Gray R : Red P : Pink V : Violet

H4J01E04BB

POWER DISTRIBUTION SYSTEM <RH drive vehicles> (CONTINUED)

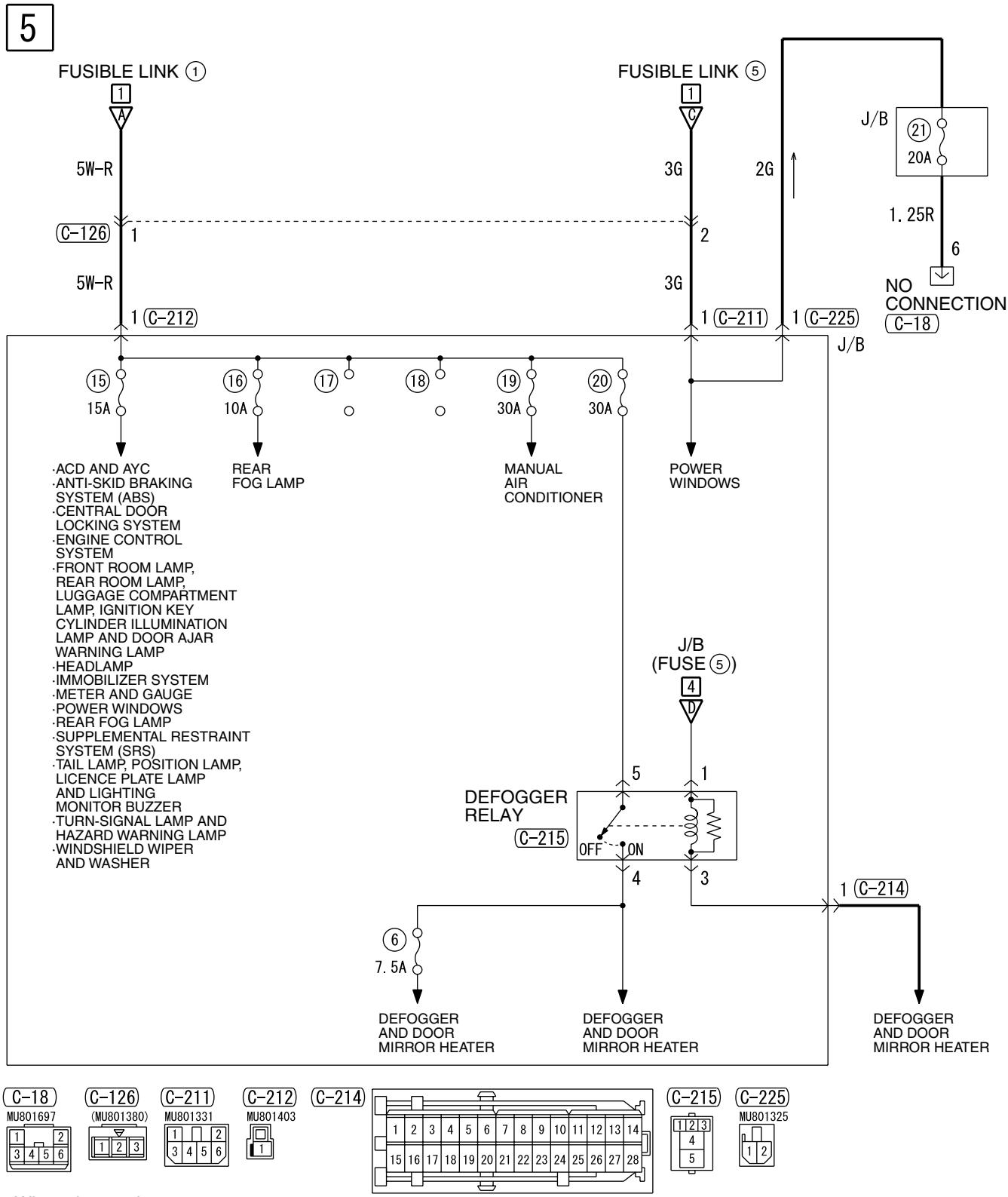

Wire colour code
B : Black LG : Light green G : Green L : Blue W : White Y : Yellow SB : Sky blue
BR : Brown O : Orange GR : Gray R : Red P : Pink V : Violet

H4J01E04CA

STARTING SYSTEM

M3030000500620

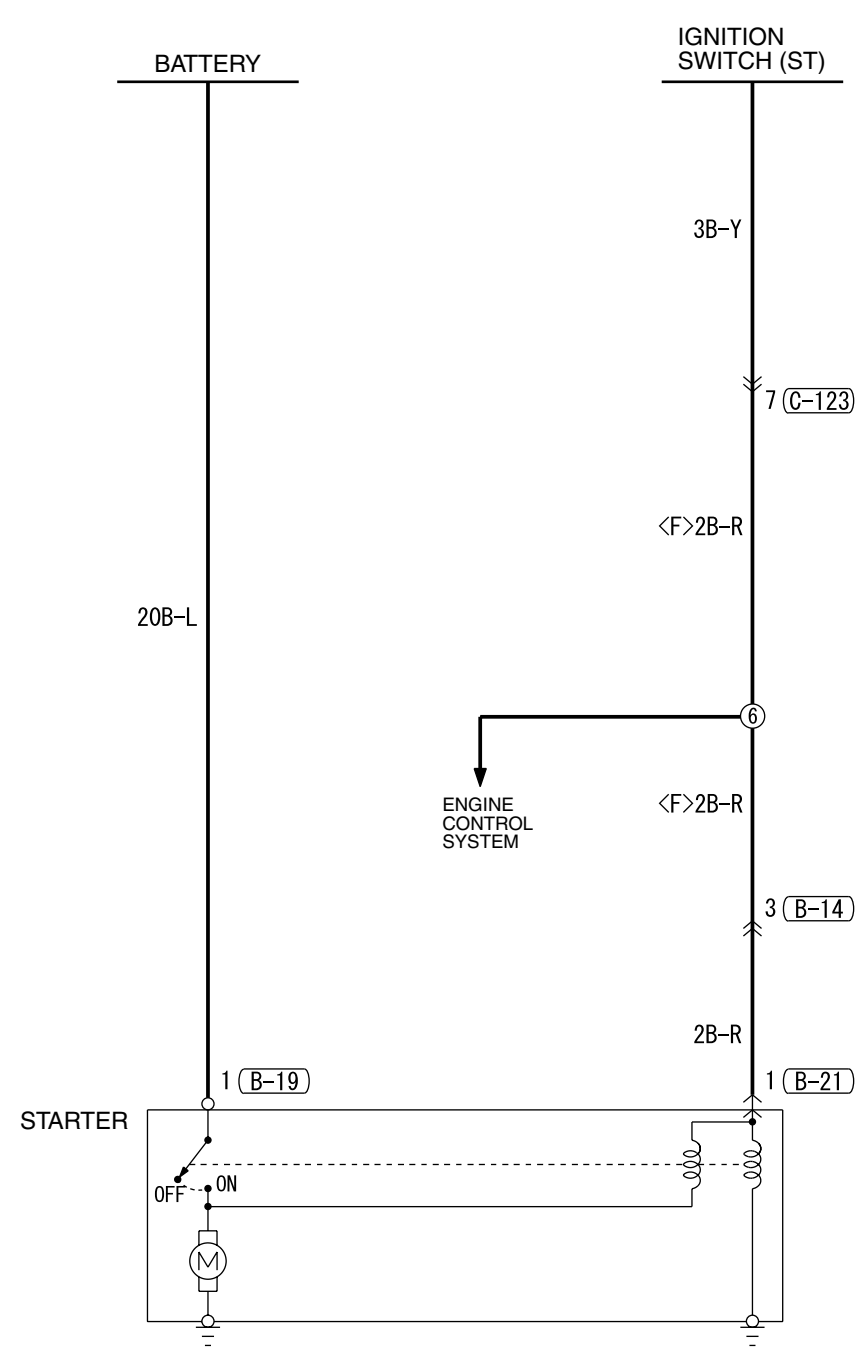

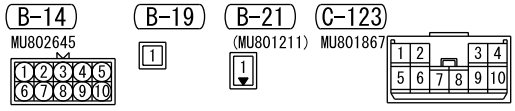

Wire colour code
B : Black LG : Light green G : Green L : Blue W : White Y : Yellow SB : Sky blue
BR : Brown O : Orange GR : Gray R : Red P : Pink V : Violet

H4J02E03AA

IGNITION SYSTEM

IGNITION SYSTEM <LH drive vehicles>

M3030000600780

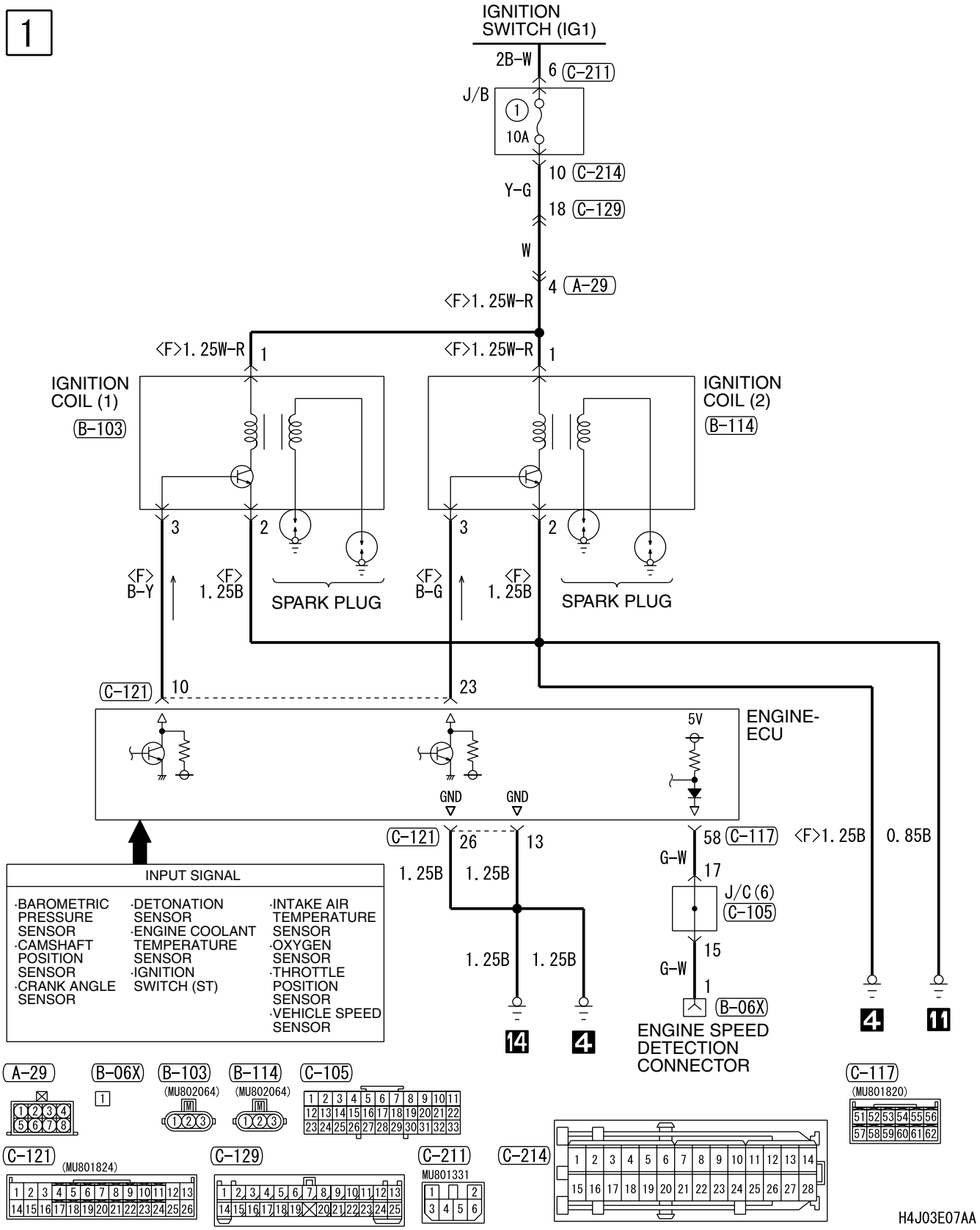

NOTES

IGNITION SYSTEM <RH drive vehicles>

M3030000600791

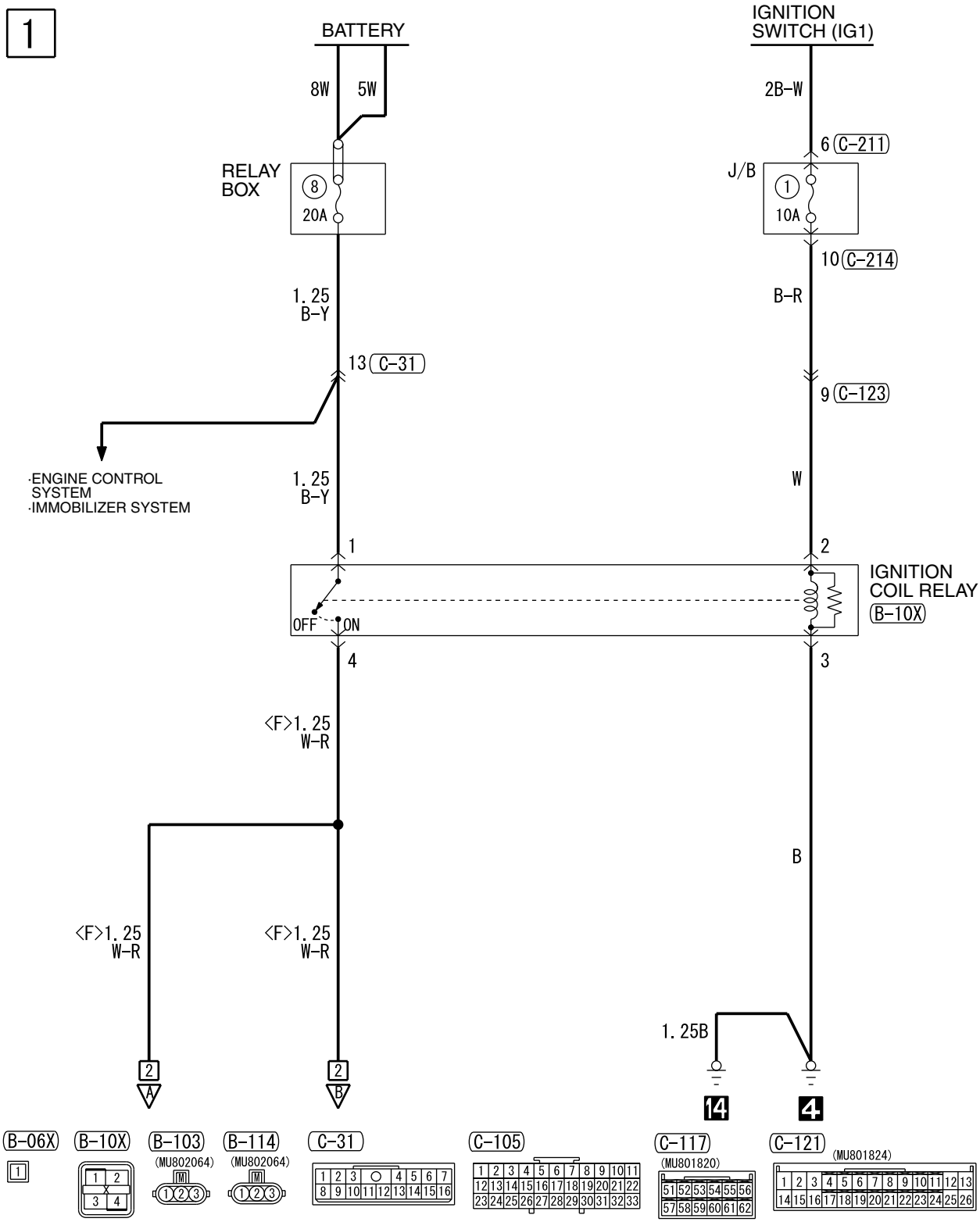

H4J03E08AA

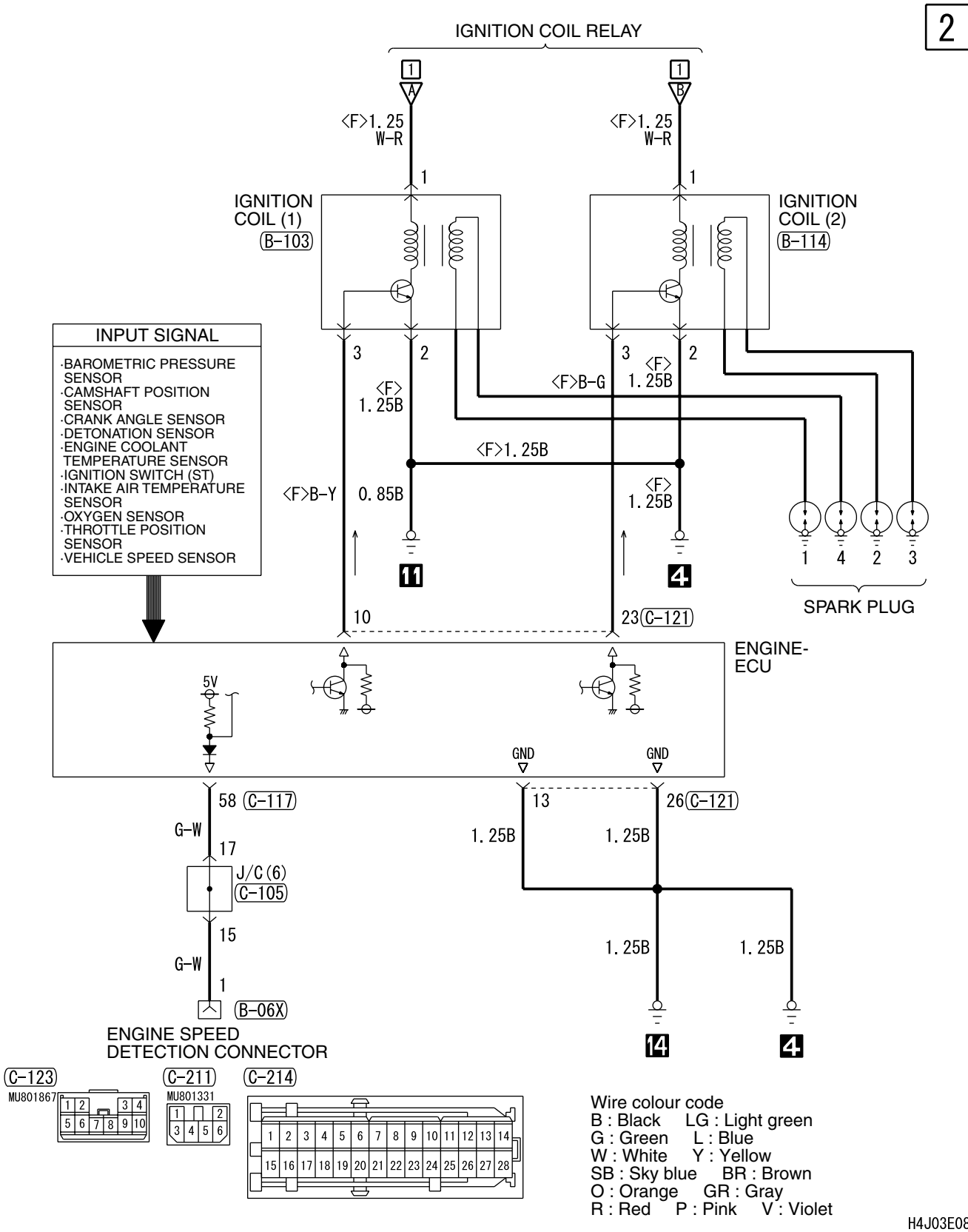
2
IGNITION COIL RELAY
1
A
B
<F>1.25
W-R
IGNITION
COIL (1)
B-103
IGNITION
COIL (2)
B-114
INPUT SIGNAL
·BAROMETRIC PRESSURE SENSOR
·CAMSHAFT POSITION SENSOR
·CRANK ANGLE SENSOR
·DETONATION SENSOR
·ENGINE COOLANT TEMPERATURE SENSOR
·IGNITION SWITCH (ST)
·INTAKE AIR TEMPERATURE SENSOR
·OXYGEN SENSOR
·THROTTLE POSITION SENSOR
·VEHICLE SPEED SENSOR
3
2
<F>
1.25B
<F>B-G
<F>B-Y
0.85B
<F>1.25B
11
4
1
4
2
3
SPARK PLUG
10
23 C-121
ENGINE-
ECU
5V
GND
58 C-117
G-W
17
J/C (6)
C-105
15
1
B-06X
ENGINE SPEED
DETECTION CONNECTOR
13
26 C-121
14
C-123
MU801867
C-211
MU801331
C-214
Wire colour code
B : Black LG : Light green
G : Green L : Blue
W : White Y : Yellow
SB : Sky blue BR : Brown
O : Orange GR : Gray
R : Red P : Pink V : Violet
H4J03E08AB

CHARGING SYSTEM

CHARGING SYSTEM <LH drive vehicles>

M3030000700538

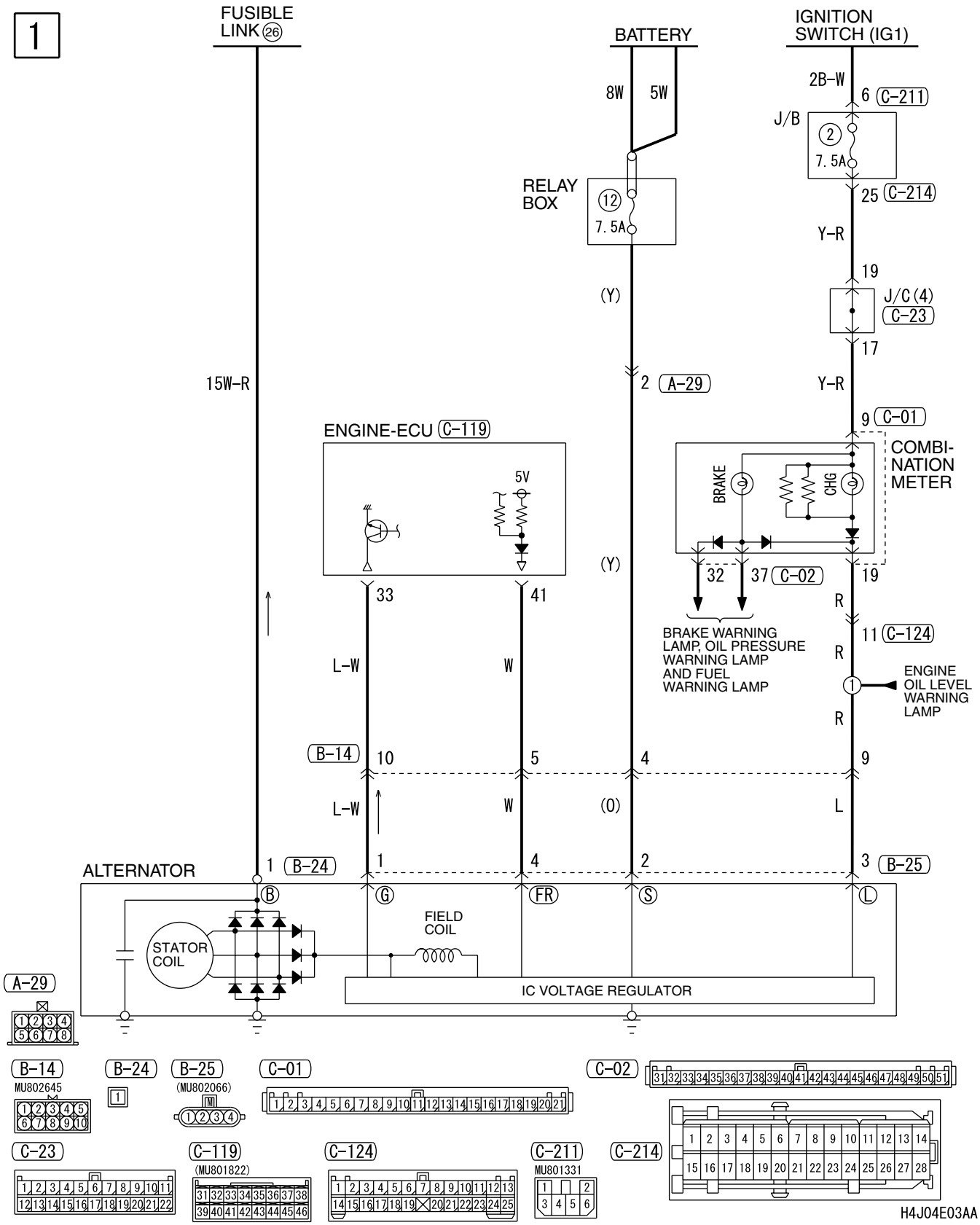

CHARGING SYSTEM <RH drive vehicles>

M3030000700549

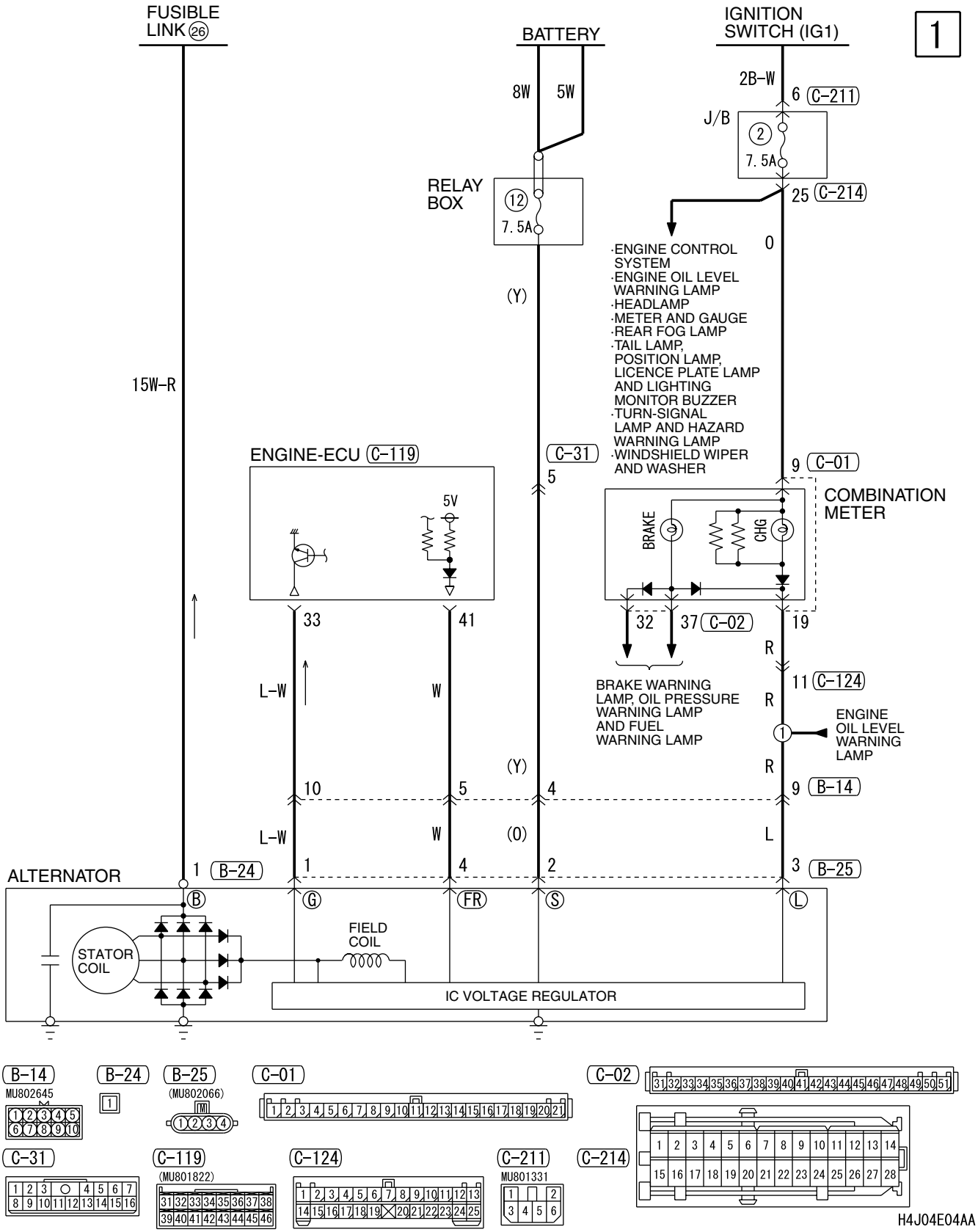

ENGINE CONTROL SYSTEM

ENGINE CONTROL SYSTEM <LH drive vehicles>

M3030000801475

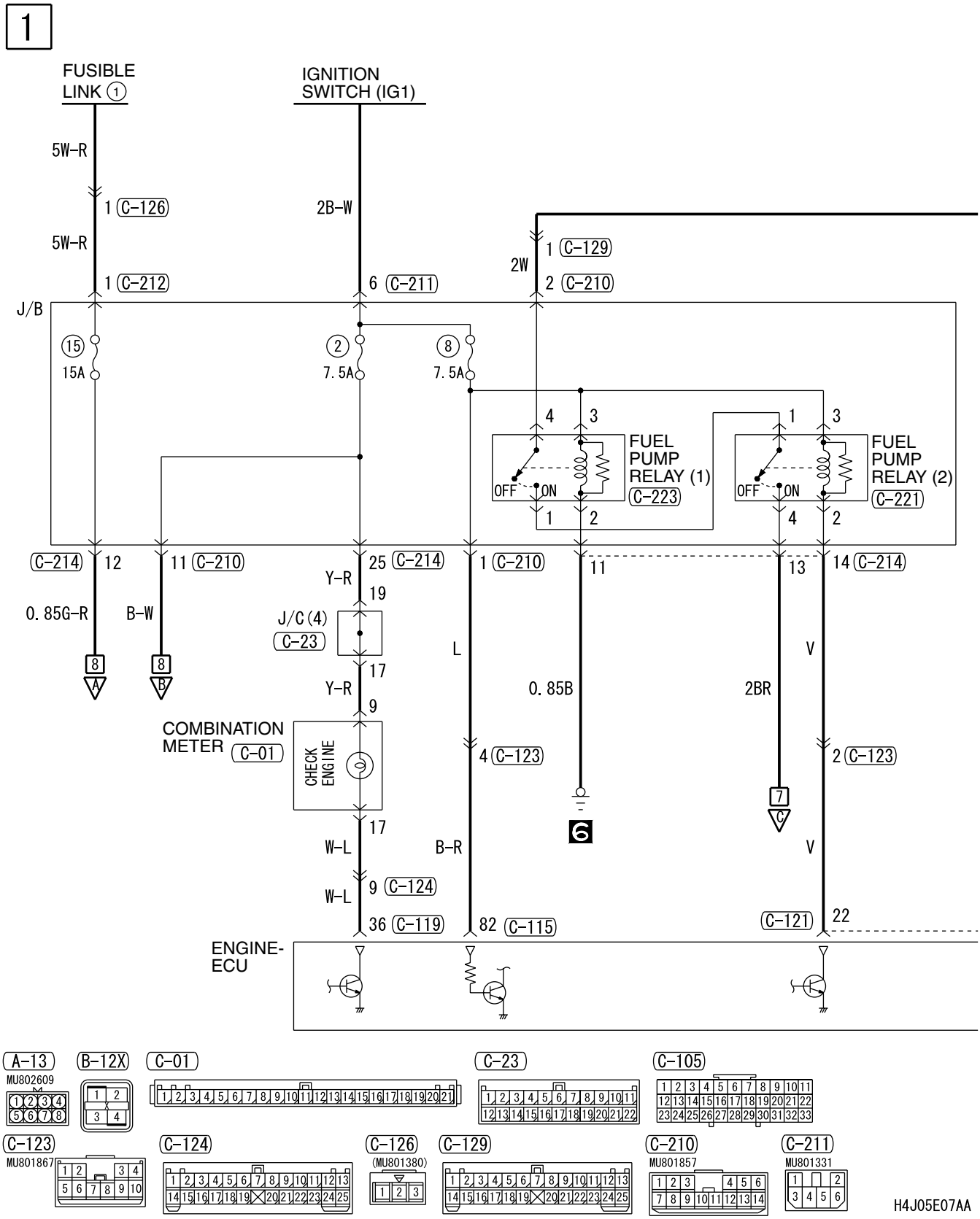

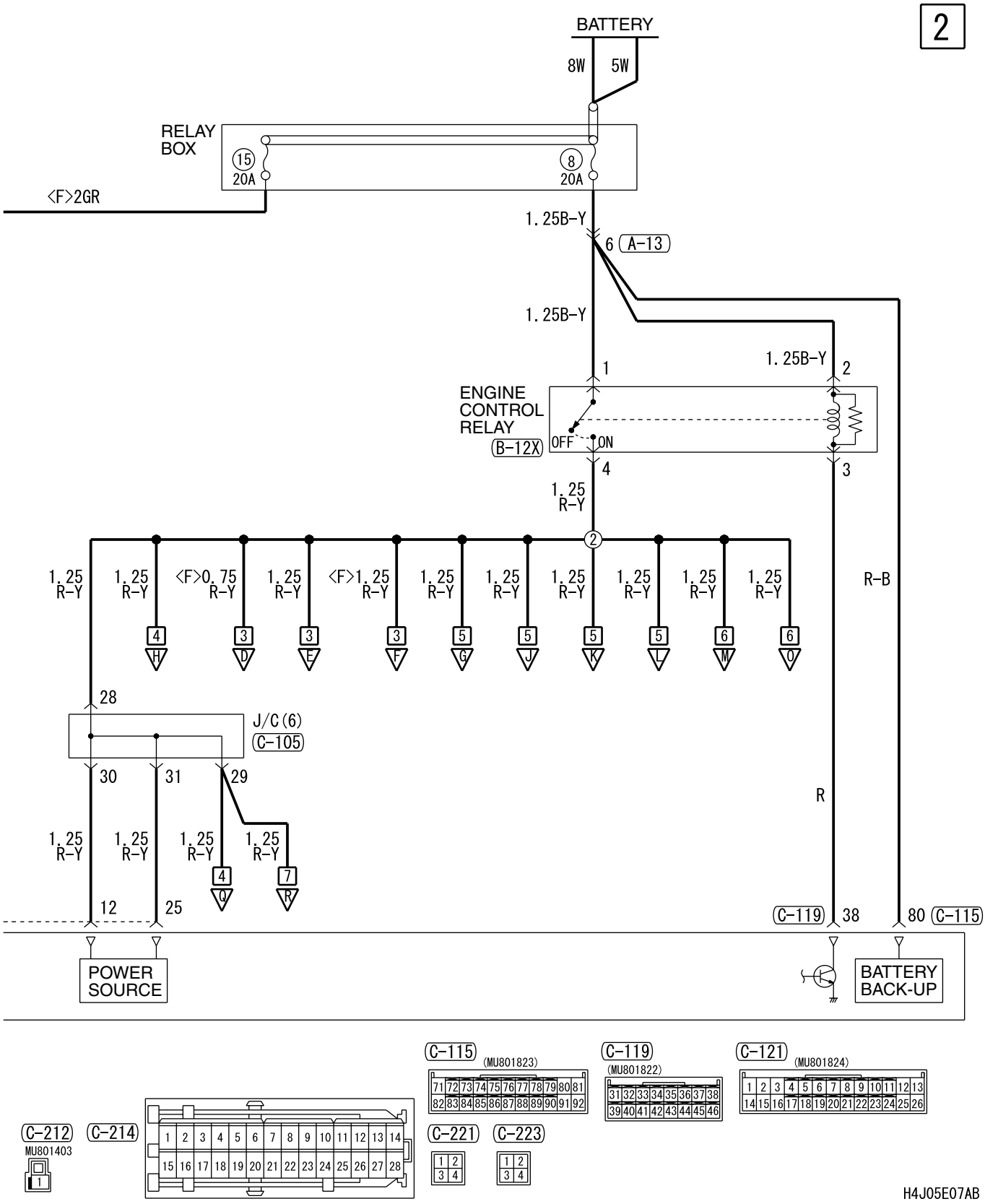
2
BATTERY
8W
5W
RELAY BOX
15
20A
8
20A
<F>2GR
1.25B-Y
6 A-13
1.25B-Y
1
1.25B-Y
2
ENGINE CONTROL RELAY
B-12X
OFF
ON
4
3
1.25 R-Y
2
1.25 R-Y
1.25 R-Y
<F>0.75 R-Y
1.25 R-Y
<F>1.25 R-Y
1.25 R-Y
1.25 R-Y
1.25 R-Y
1.25 R-Y
1.25 R-Y
1.25 R-Y
R-B
4 H
3 D
3 E
3 F
5 G
5 J
5 K
5 L
6 W
6 Q
28
J/C (6)
C-105
30
31
29
1.25 R-Y
1.25 R-Y
1.25 R-Y
1.25 R-Y
4 Q
7 R
12
25
R
C-119
38
80
C-115
POWER SOURCE
BATTERY BACK-UP
C-115
(MU801823)
71 72 73 74 75 76 77 78 79 80 81
82 83 84 85 86 87 88 89 90 91 92
C-119
(MU801822)
31 32 33 34 35 36 37 38
39 40 41 42 43 44 45 46
C-121
(MU801824)
1 2 3 4 5 6 7 8 9 10 11 12 13
14 15 16 17 18 19 20 21 22 23 24 25 26
C-212
MU801403
1
C-214
1 2 3 4 5 6 7 8 9 10 11 12 13 14
15 16 17 18 19 20 21 22 23 24 25 26 27 28
C-221
1 2
3 4
C-223
1 2
3 4
H4J05E07AB

ENGINE CONTROL SYSTEM <LH drive vehicles> (CONTINUED)

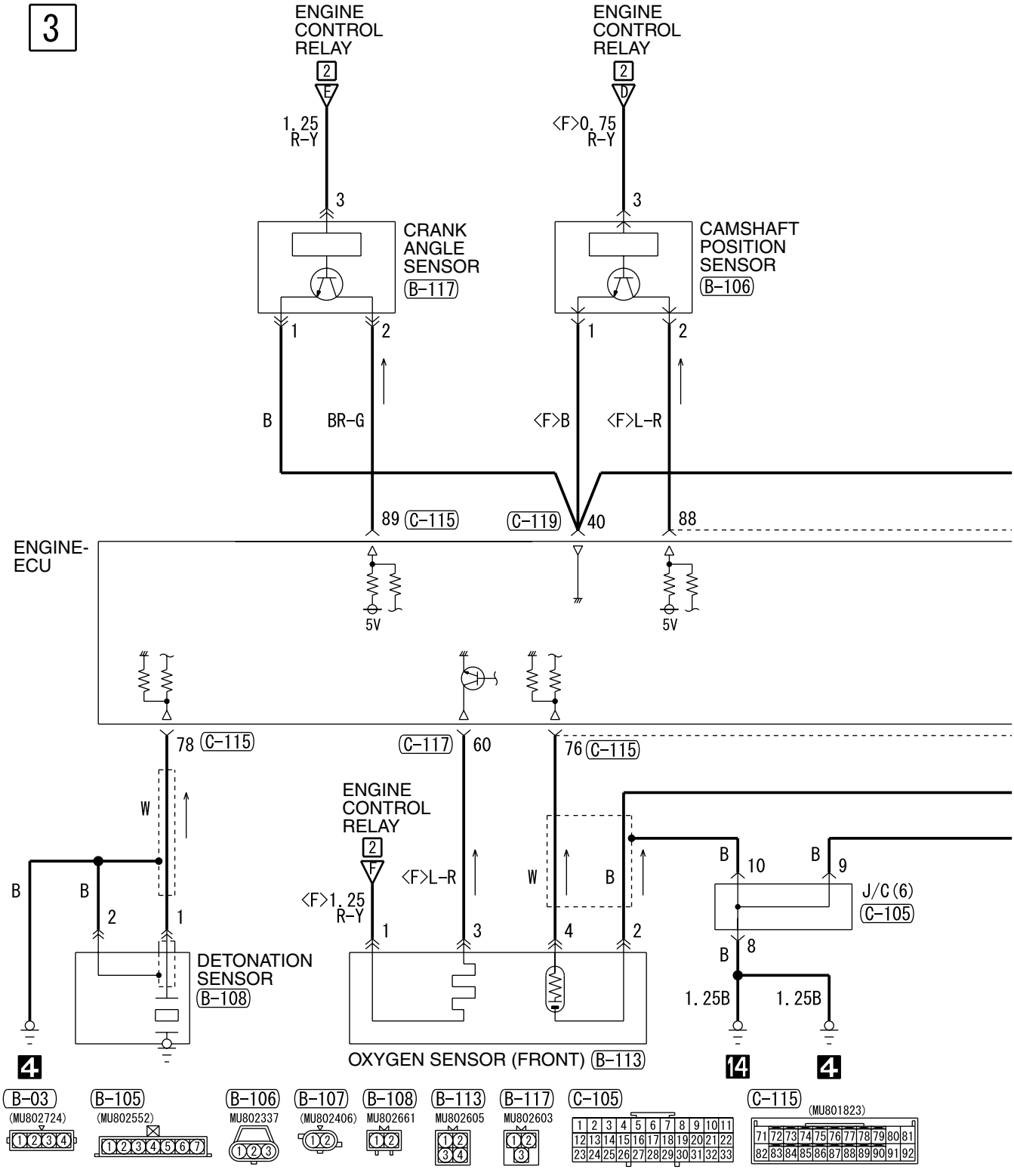

H4J05E07BA

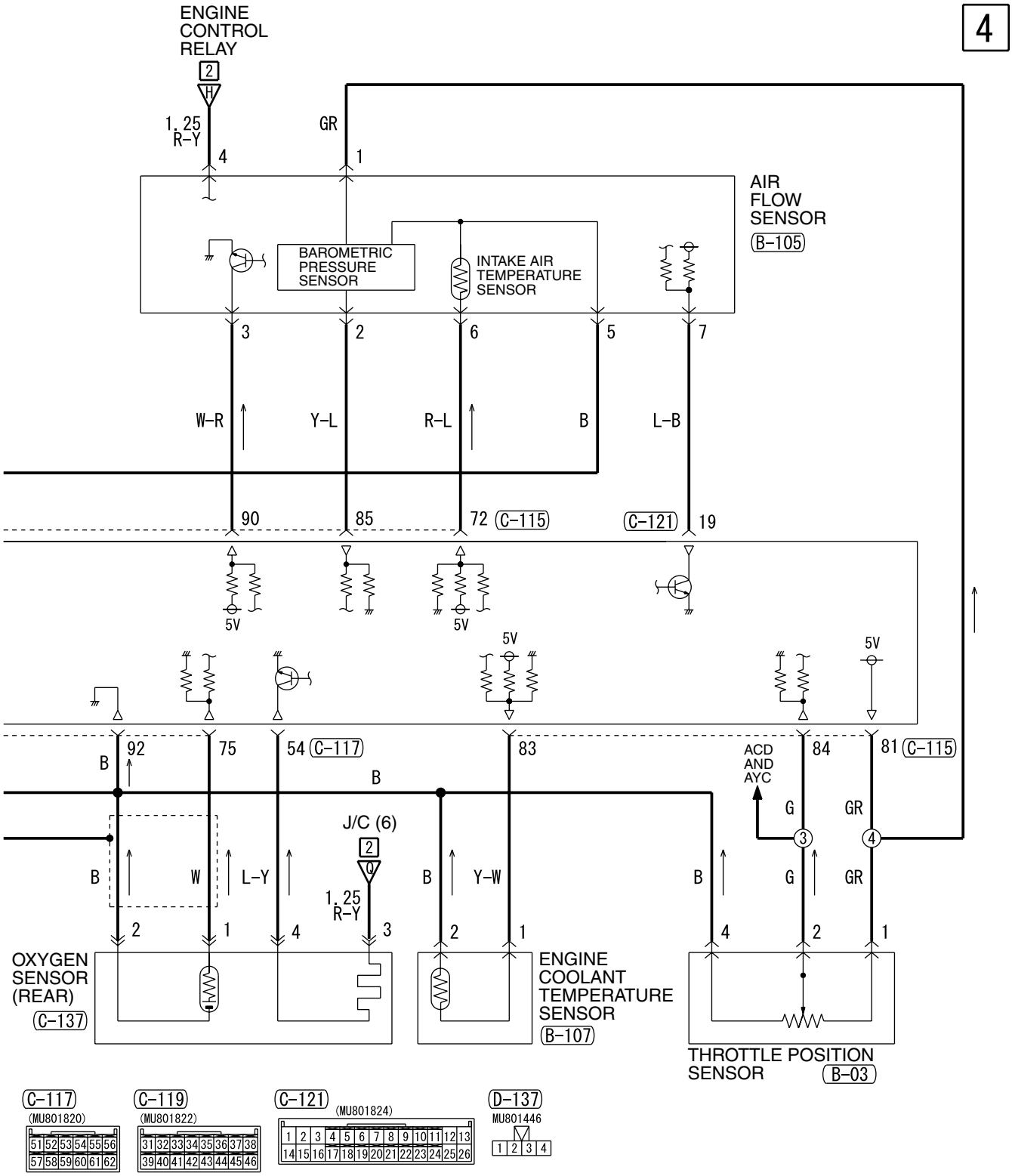

Wire colour code
B : Black LG : Light green G : Green L : Blue W : White Y : Yellow SB : Sky blue
BR : Brown O : Orange GR : Gray R : Red P : Pink V : Violet

H4J05E07BB

ENGINE CONTROL SYSTEM <LH drive vehicles> (CONTINUED)

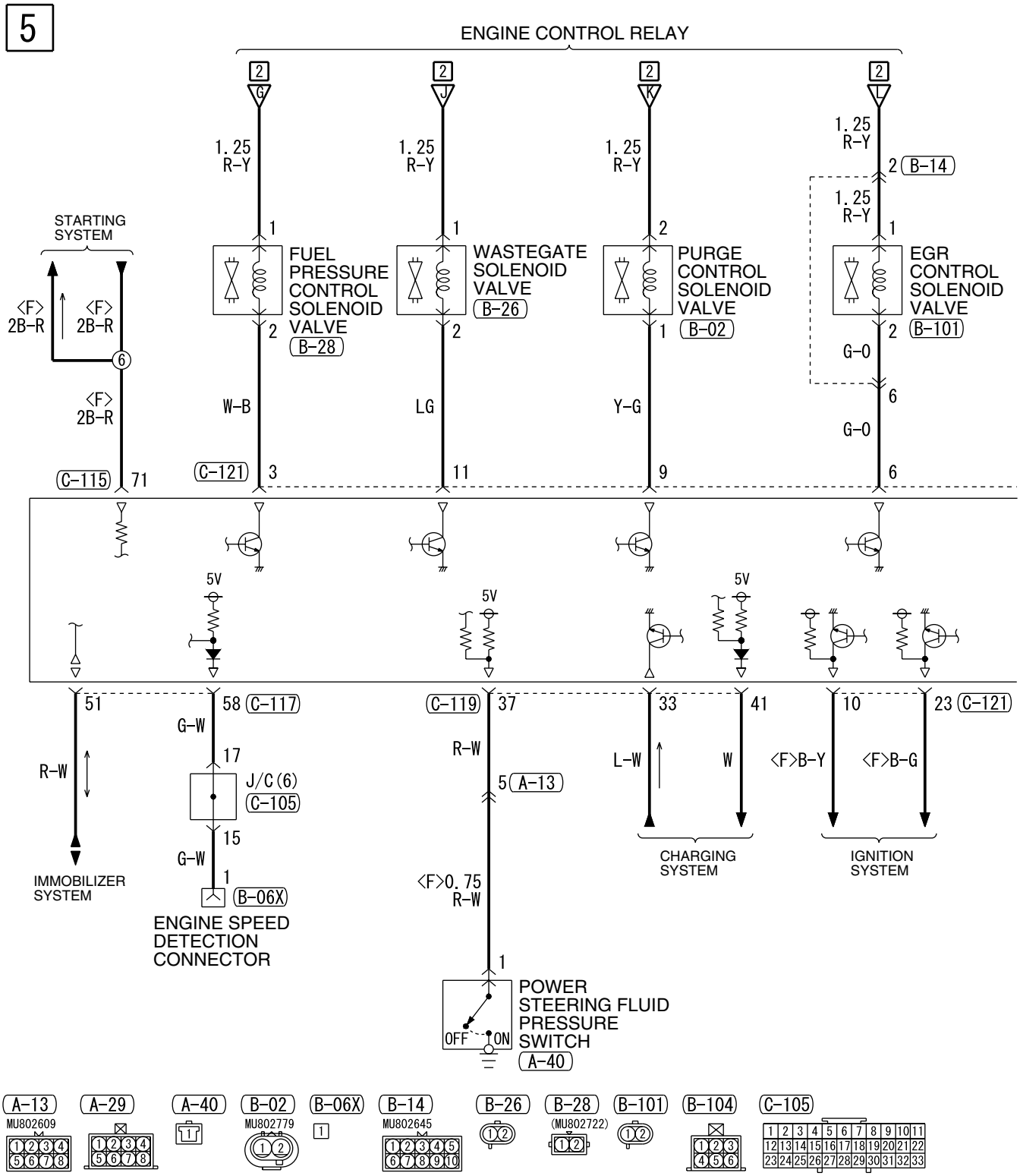

H4J05E07CA

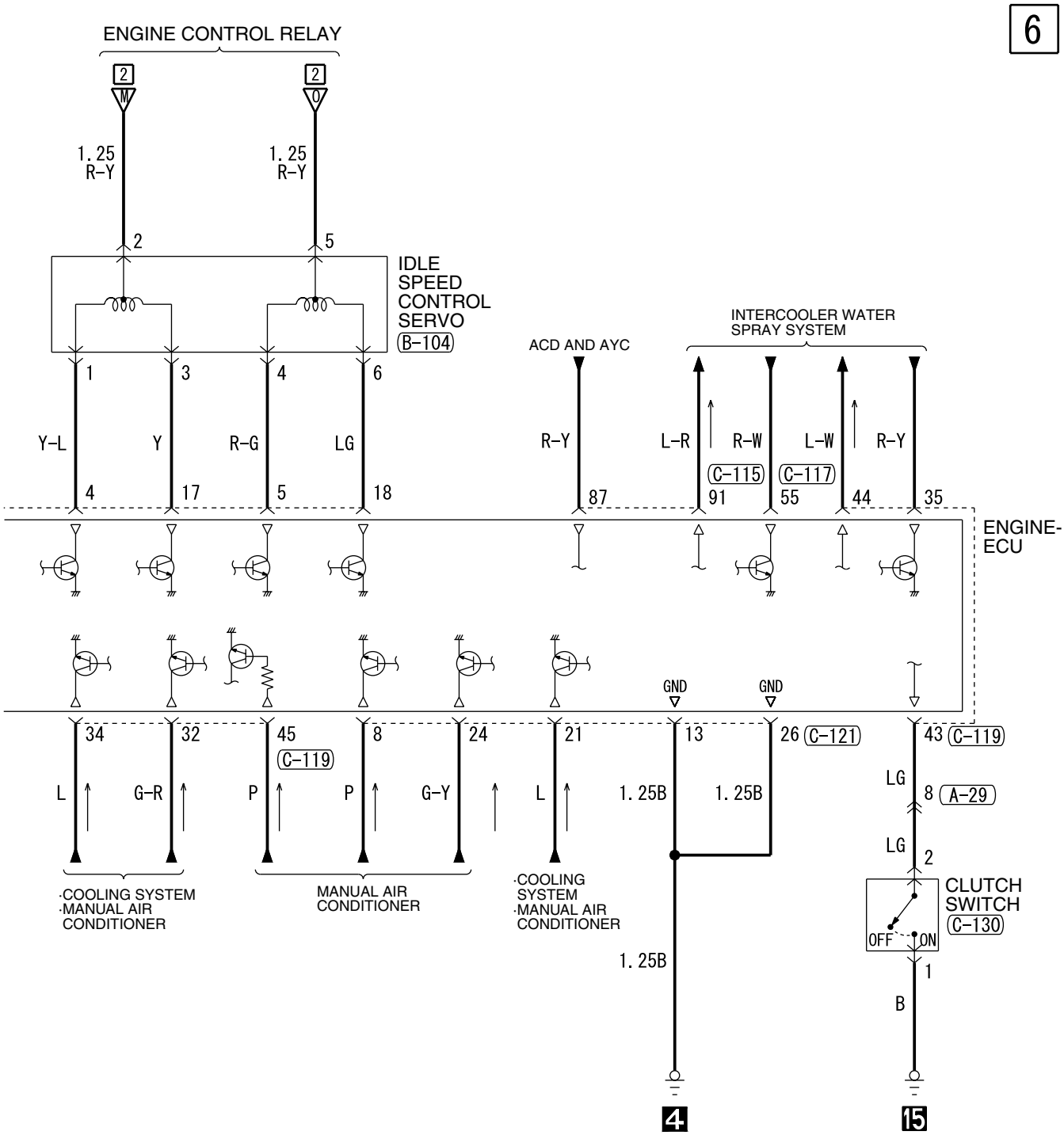

Wire colour code
B : Black LG : Light green G : Green L : Blue W : White Y : Yellow SB : Sky blue
BR : Brown O : Orange GR : Gray R : Red P : Pink V : Violet

H4J05E07CB

ENGINE CONTROL SYSTEM <LH drive vehicles> (CONTINUED)

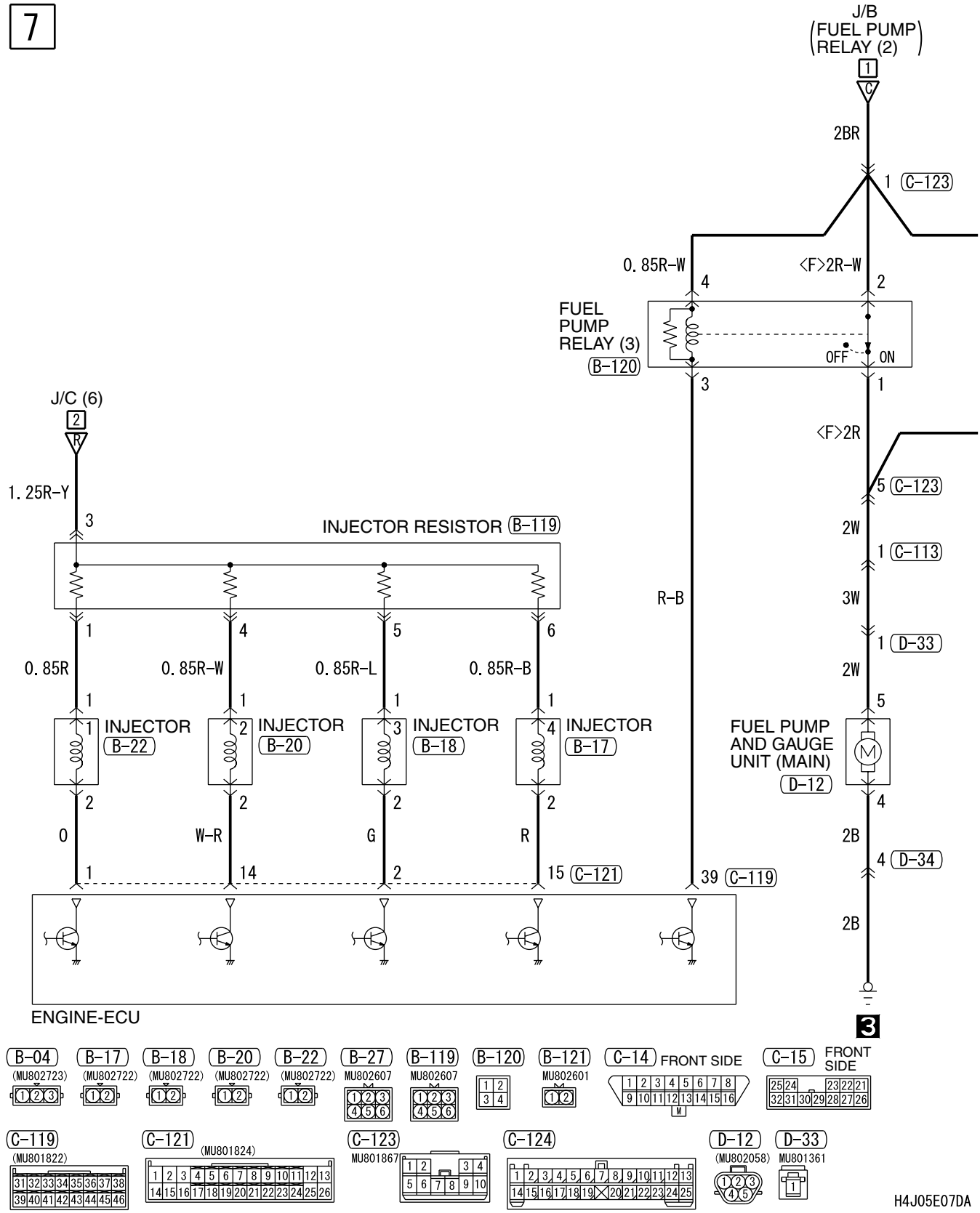

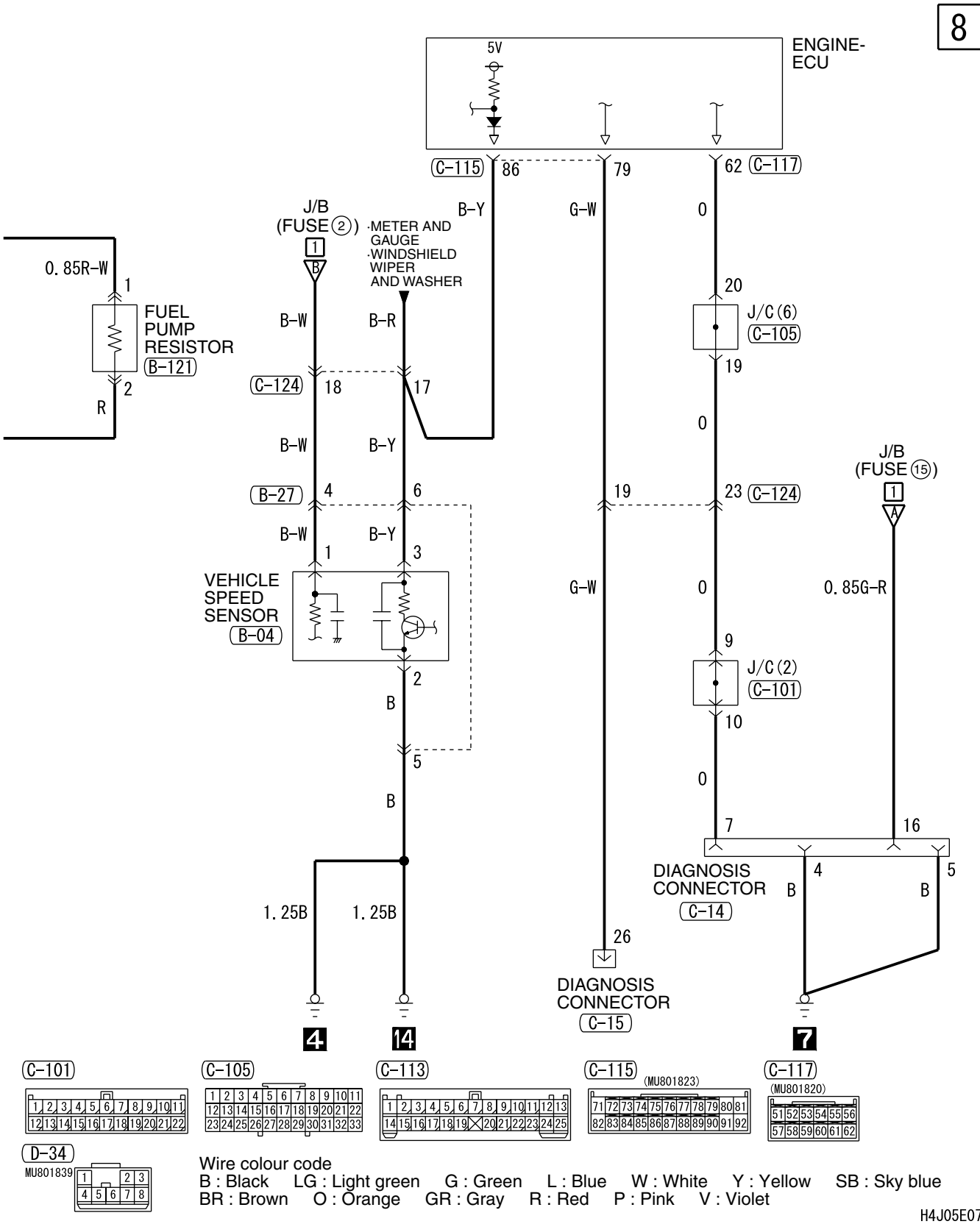

Wire colour code
B : Black LG : Light green G : Green L : Blue W : White Y : Yellow SB : Sky blue
BR : Brown O : Orange GR : Gray R : Red P : Pink V : Violet

H4J05E07DB

ENGINE CONTROL SYSTEM <RH drive vehicles>

M3030000801486

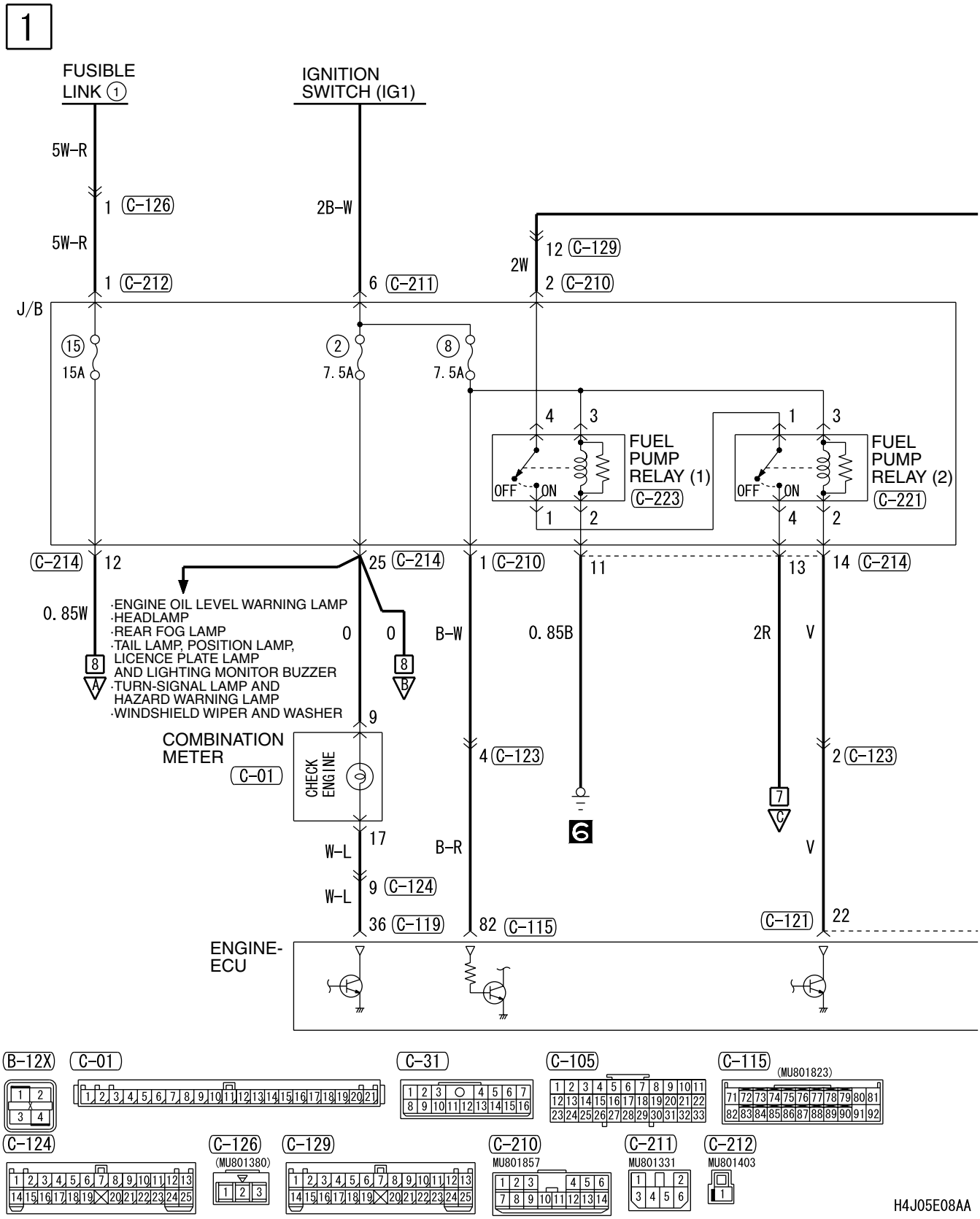

H4J05E08AA

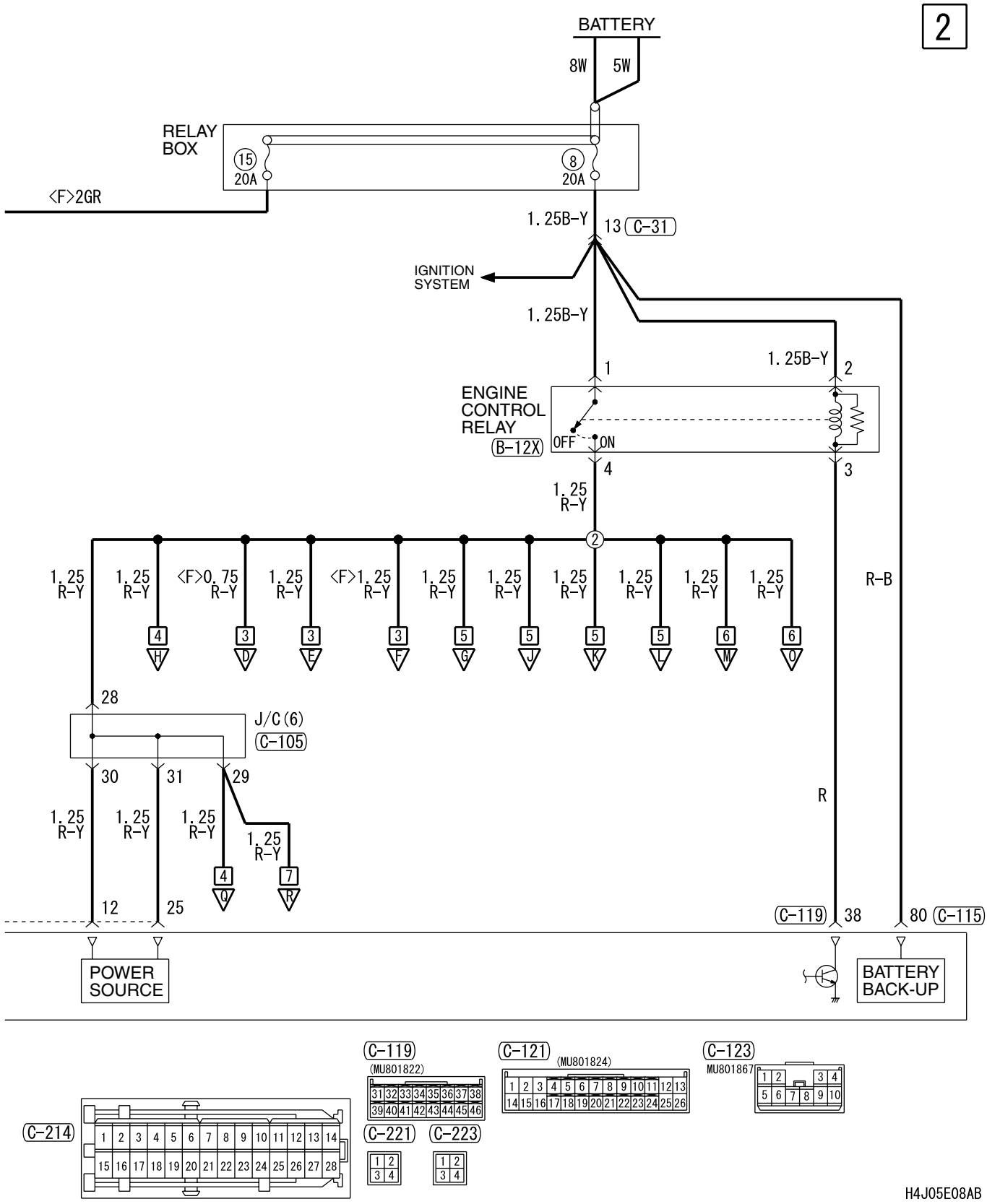
2
BATTERY
8W
5W
RELAY BOX
15
20A
8
20A
<F>2GR
1.25B-Y
13 C-31
IGNITION SYSTEM
1.25B-Y
1
1.25B-Y
2
ENGINE CONTROL RELAY
B-12X
OFF
ON
4
3
1.25 R-Y
2
1.25 R-Y
1.25 R-Y
<F>0.75 R-Y
1.25 R-Y
<F>1.25 R-Y
1.25 R-Y
1.25 R-Y
1.25 R-Y
1.25 R-Y
1.25 R-Y
1.25 R-Y
R-B
4 H
3 D
3 E
3 F
5 G
5 J
5 K
5 L
6 W
6 Q
28
J/C (6)
C-105
30
31
29
1.25 R-Y
1.25 R-Y
1.25 R-Y
1.25 R-Y
4 Q
7 R
12
25
R
C-119
38
80
C-115
POWER SOURCE
BATTERY BACK-UP
C-214
C-119
(MU801822)
C-121
(MU801824)
C-123
MU801867
C-221
C-223
H4J05E08AB

ENGINE CONTROL SYSTEM <RH drive vehicles> (CONTINUED)

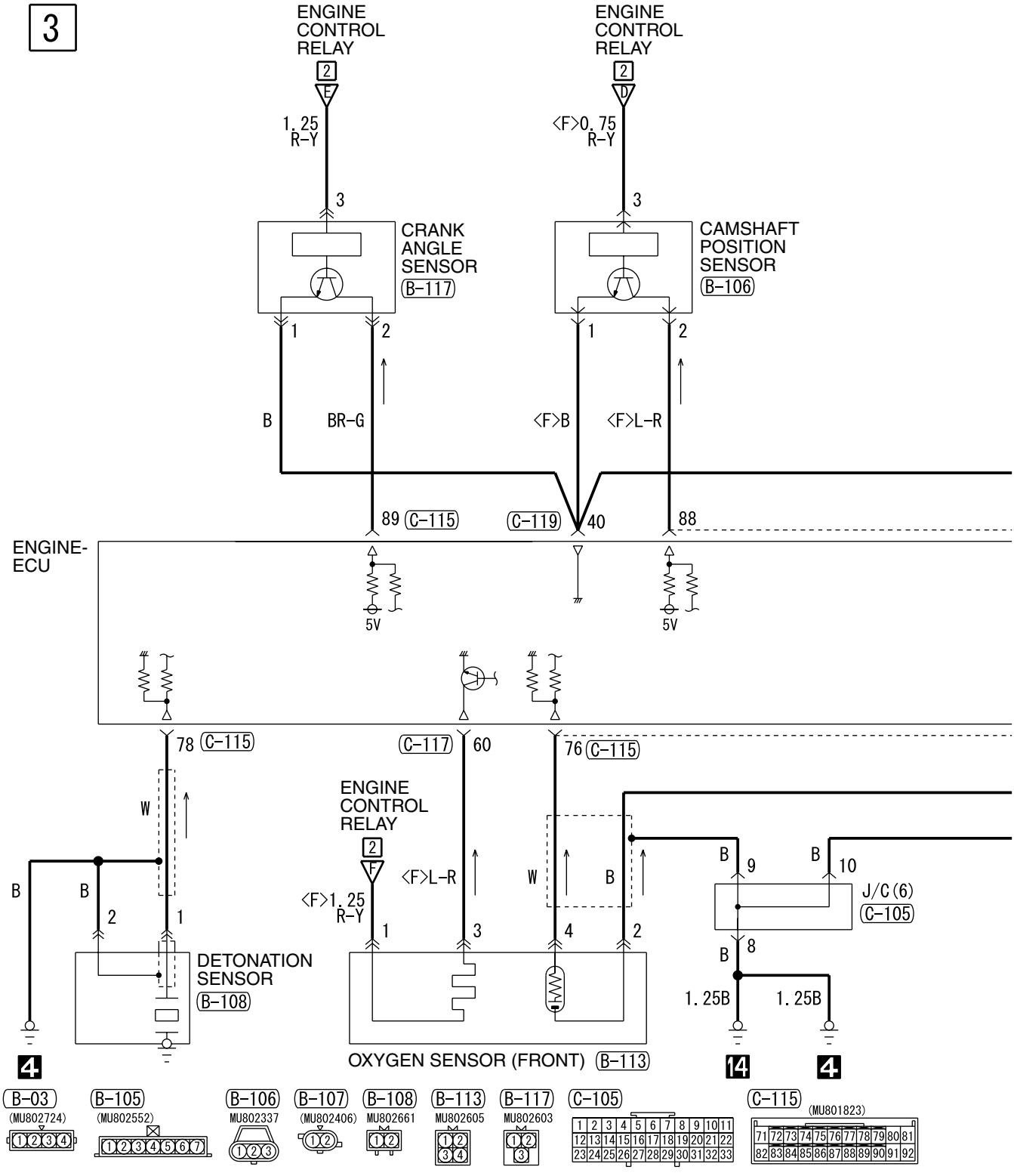

H4J05E08BA

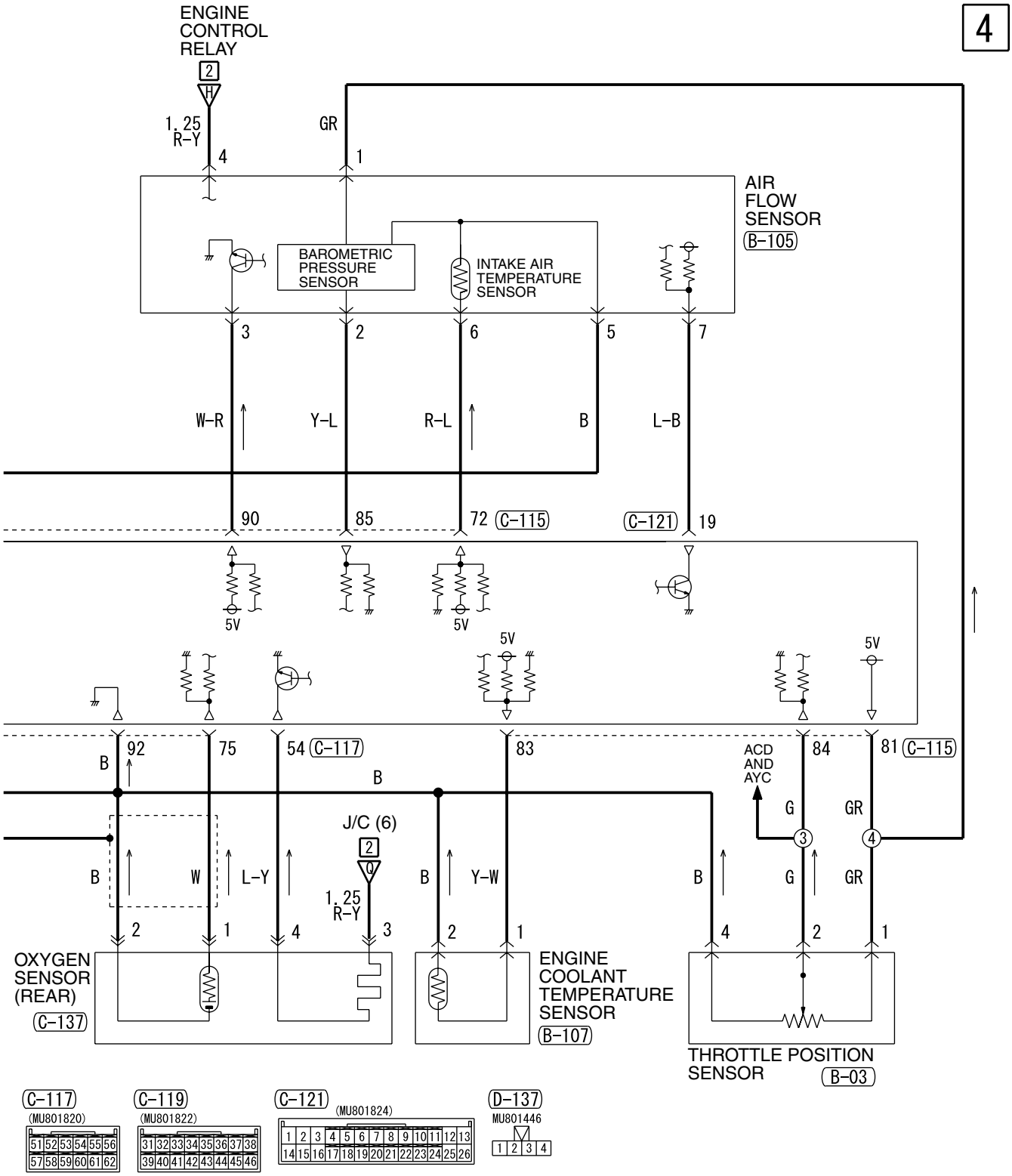

Wire colour code
B : Black LG : Light green G : Green L : Blue W : White Y : Yellow SB : Sky blue
BR : Brown O : Orange GR : Gray R : Red P : Pink V : Violet

H4J05E08BB

ENGINE CONTROL SYSTEM <RH drive vehicles> (CONTINUED)

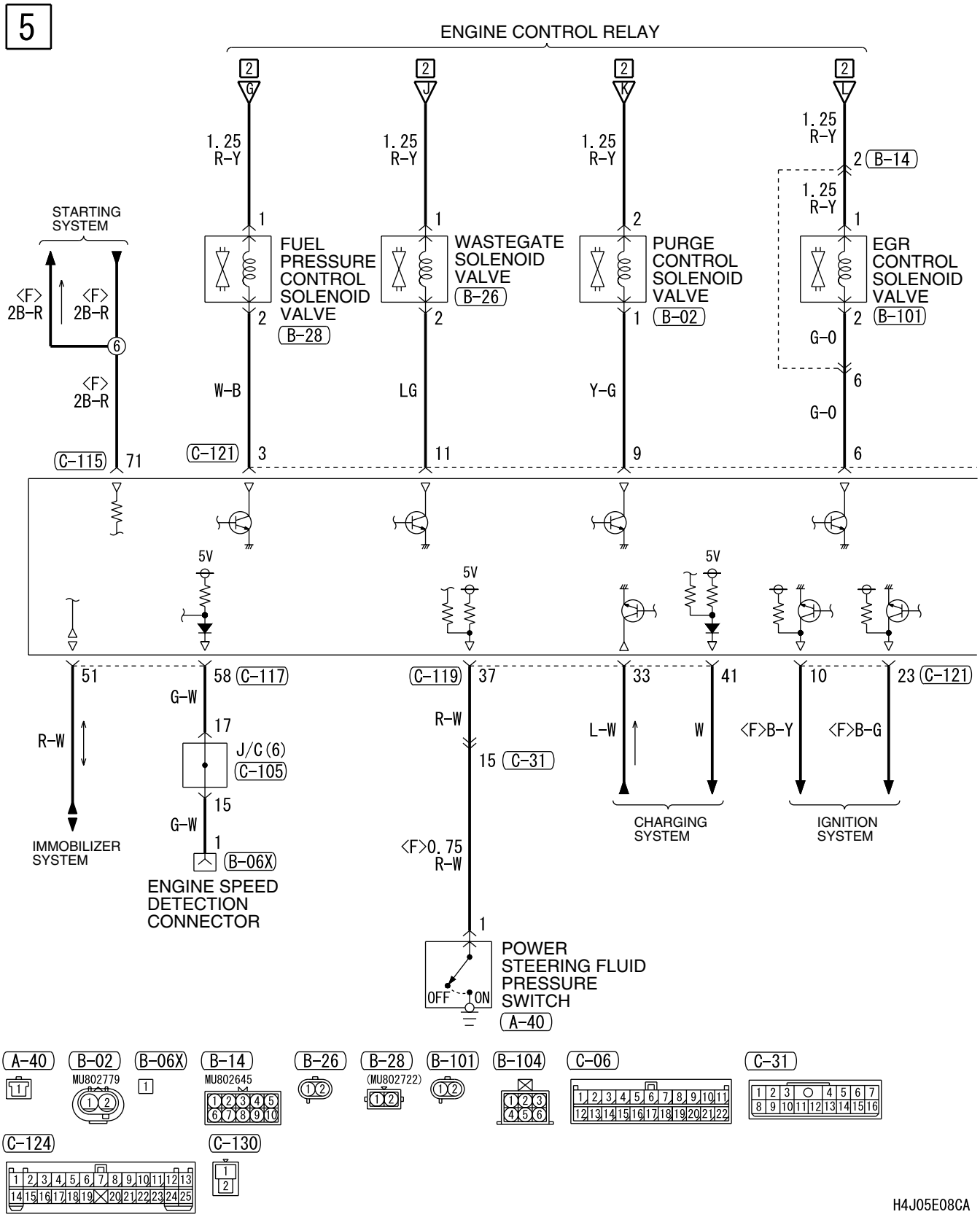

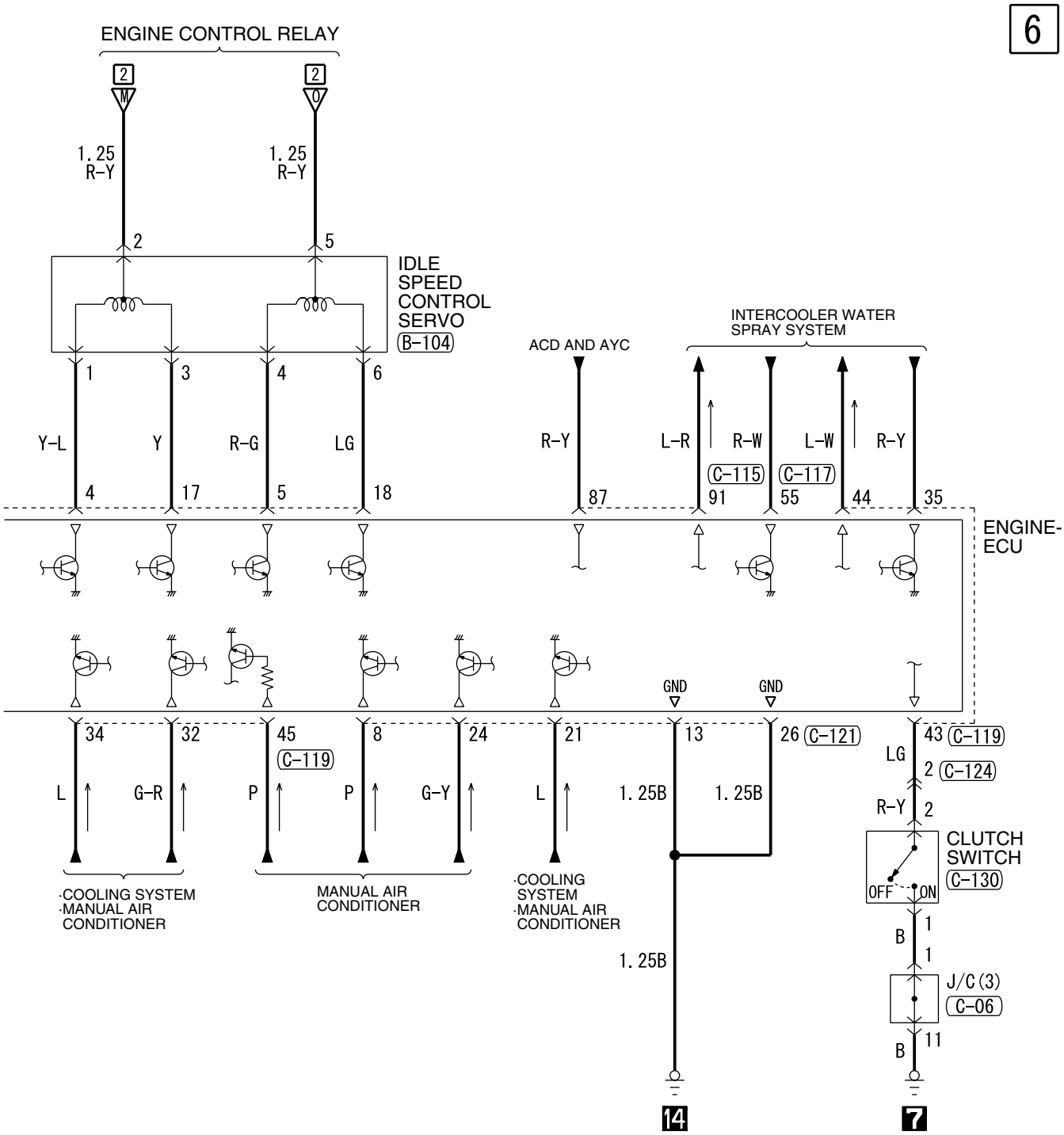

Wire colour code
B : Black LG : Light green G : Green L : Blue W : White Y : Yellow SB : Sky blue
BR : Brown O : Orange GR : Gray R : Red P : Pink V : Violet

H4J05E08CB

ENGINE CONTROL SYSTEM <RH drive vehicles> (CONTINUED)

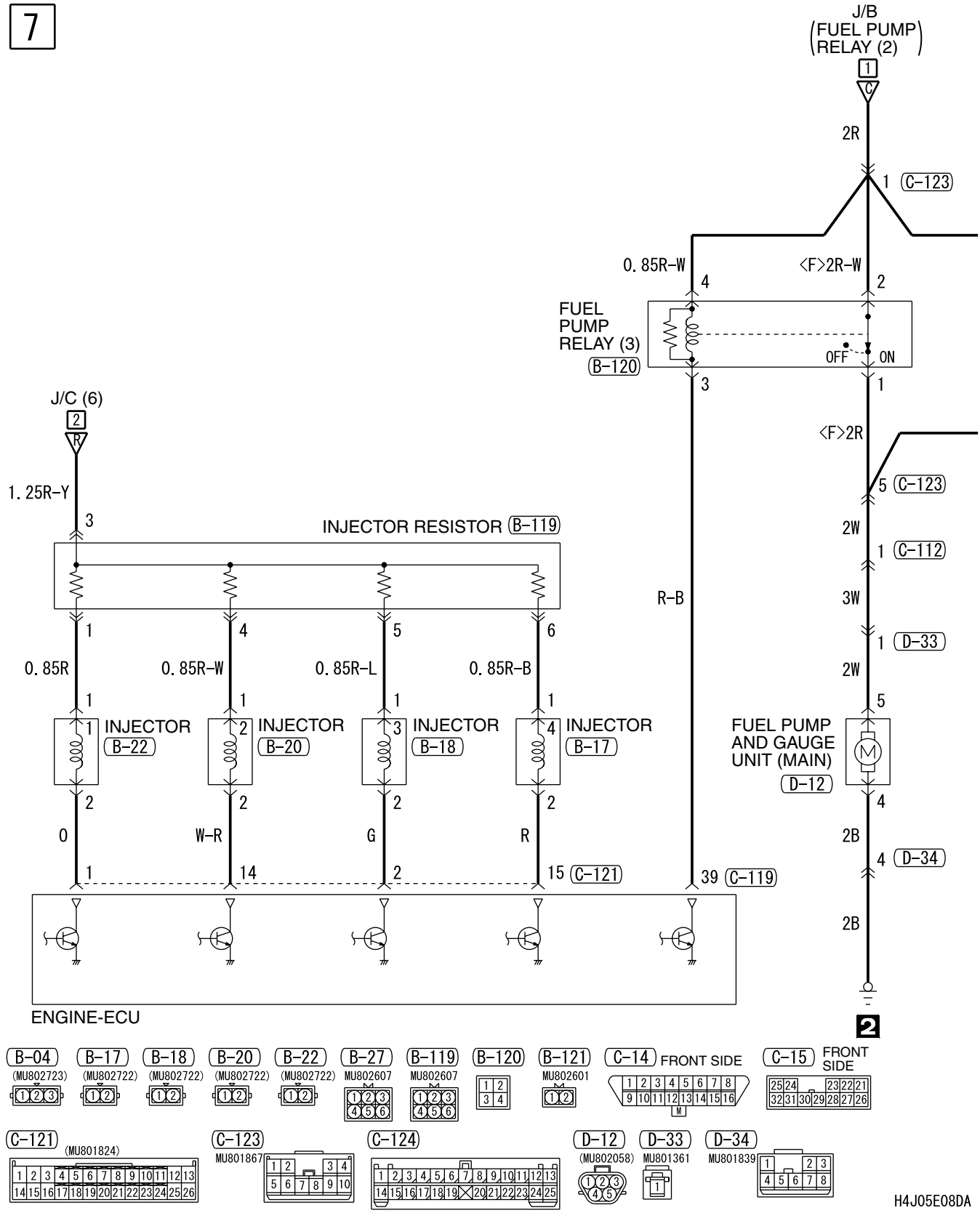

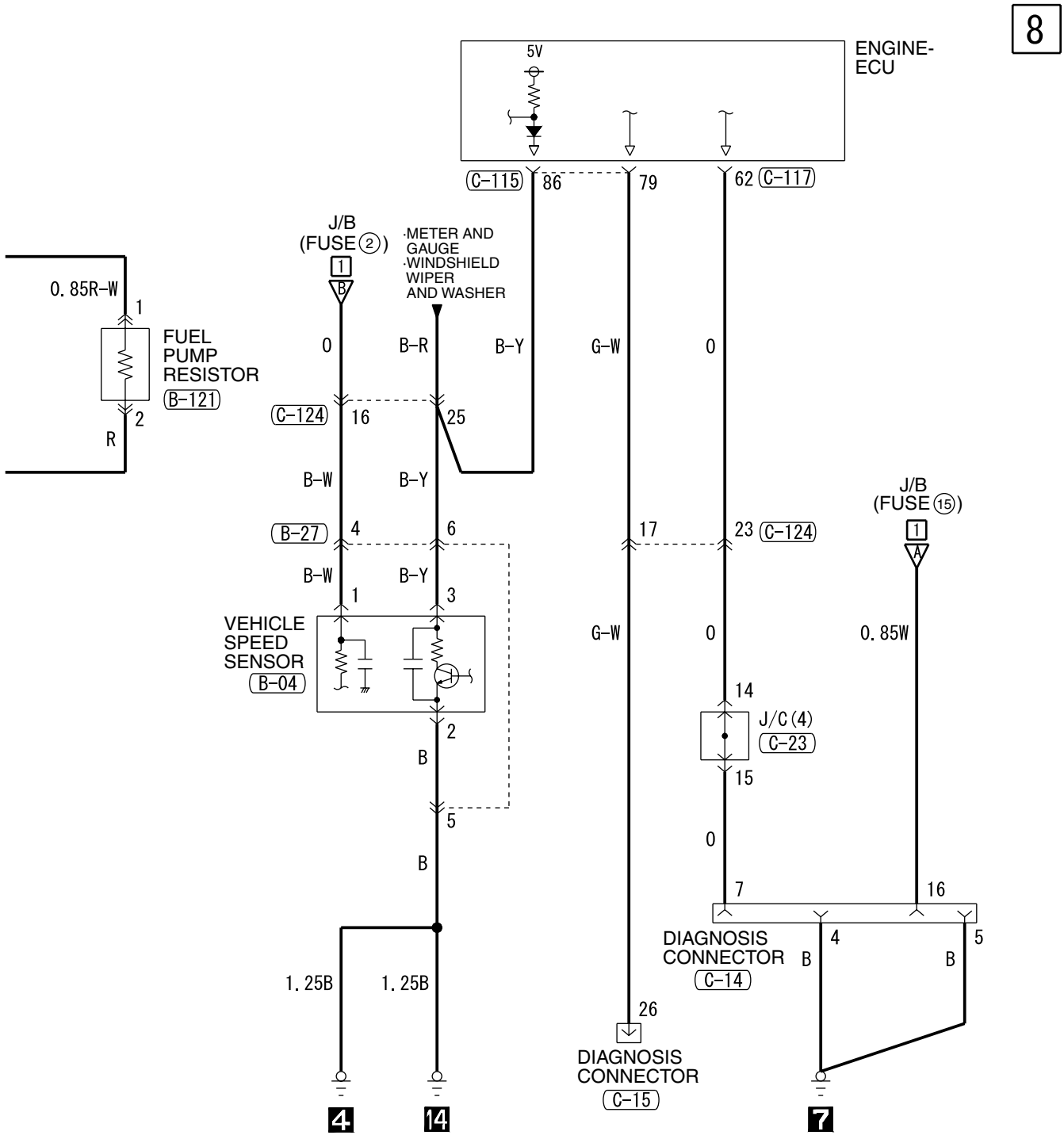

Wire colour code
B : Black LG : Light green G : Green L : Blue W : White Y : Yellow SB : Sky blue
BR : Brown O : Orange GR : Gray R : Red P : Pink V : Violet

H4J05E08DB

COOLING SYSTEM

COOLING SYSTEM <LH drive vehicles>

M3030001000662

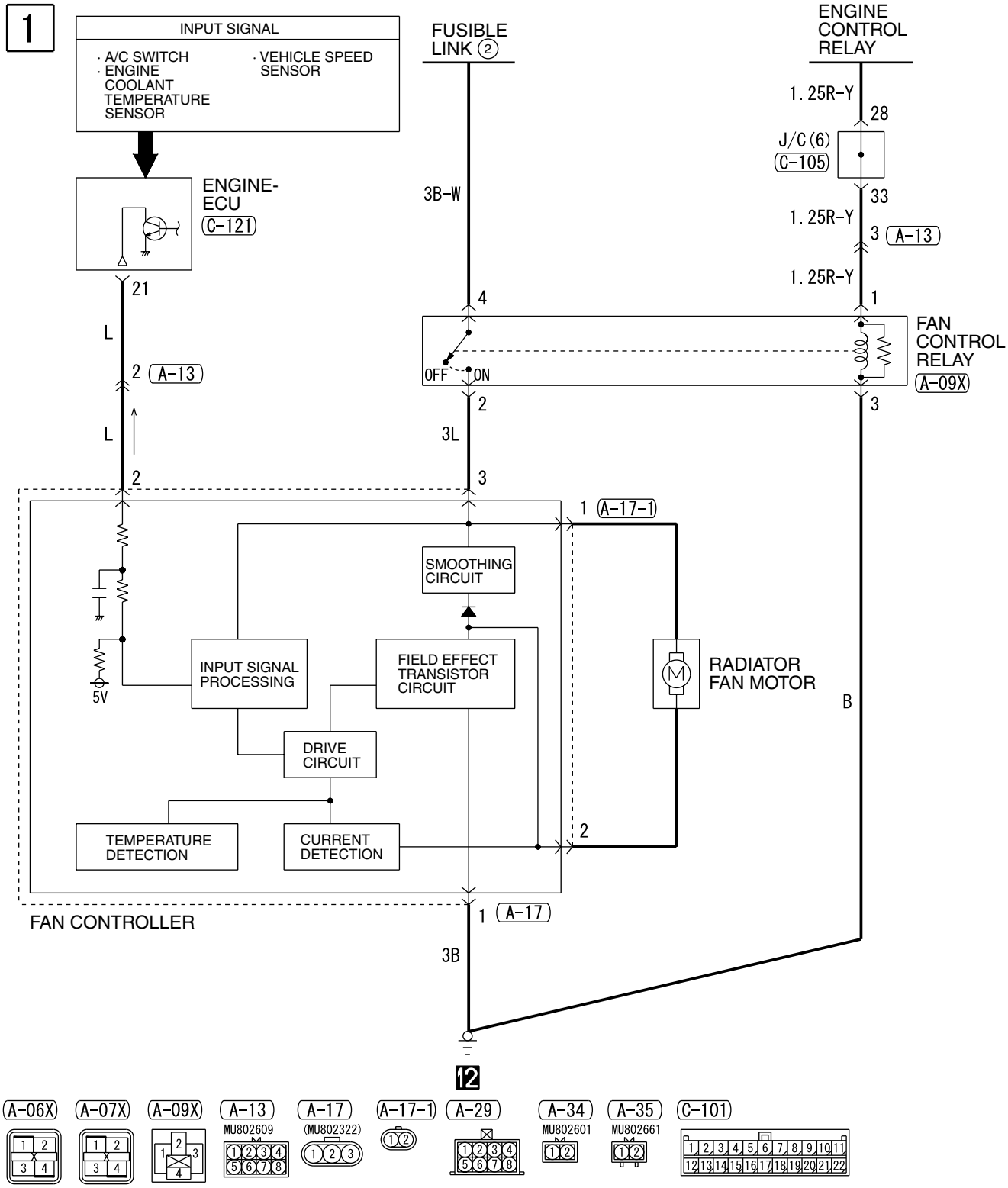

H4J06E03AA

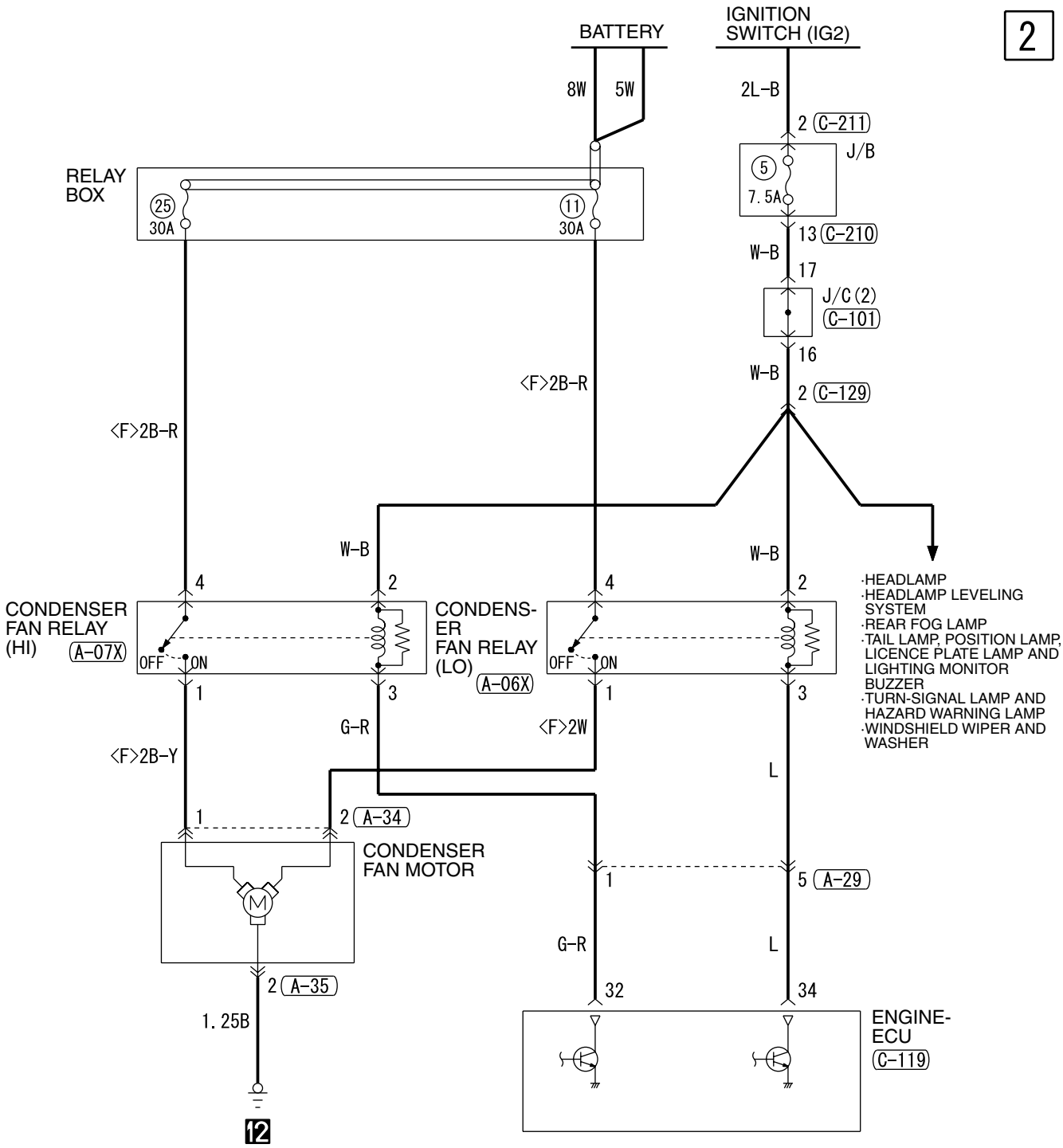

Wire colour code
B : Black LG : Light green G : Green L : Blue W : White Y : Yellow SB : Sky blue
BR : Brown O : Orange GR : Gray R : Red P : Pink V : Violet

H4J06E03AB

COOLING SYSTEM <RH drive vehicles>

M3030001000673

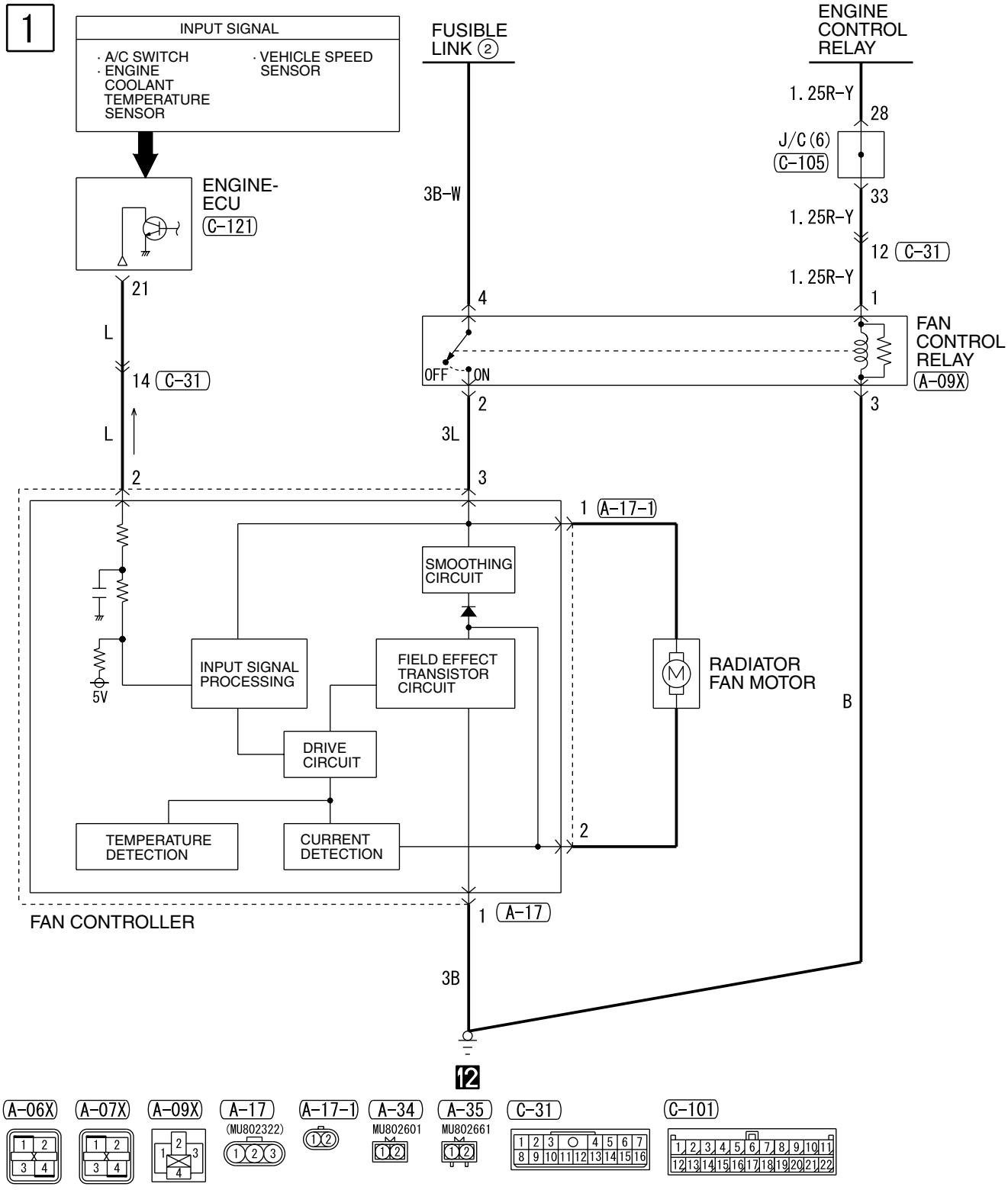

H4J06E04AA

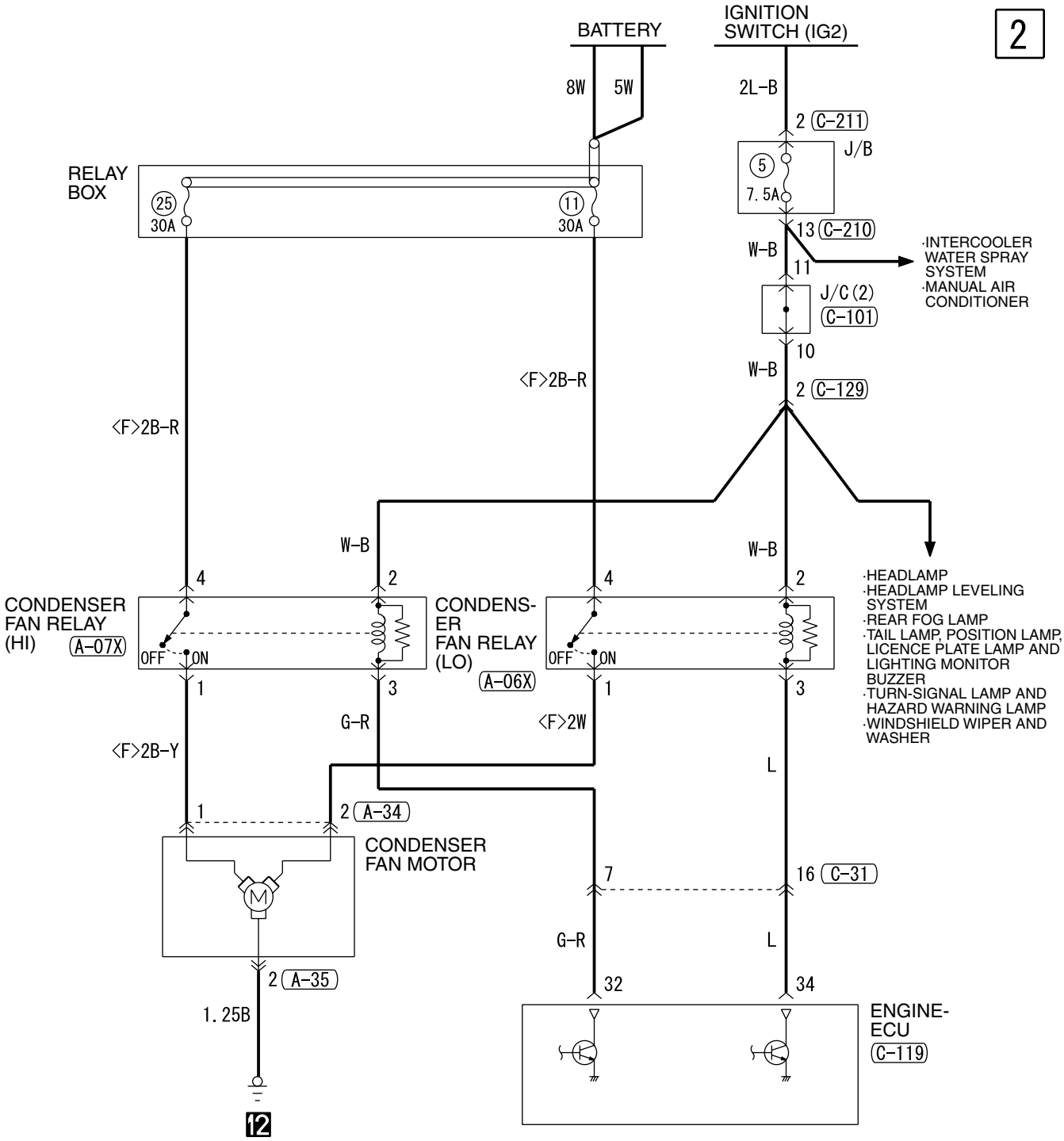

Wire colour code
B : Black LG : Light green G : Green L : Blue W : White Y : Yellow SB : Sky blue
BR : Brown O : Orange GR : Gray R : Red P : Pink V : Violet

H4J06E04AB

HEADLAMP

HEADLAMP <LH drive vehicles>

M3030001500805

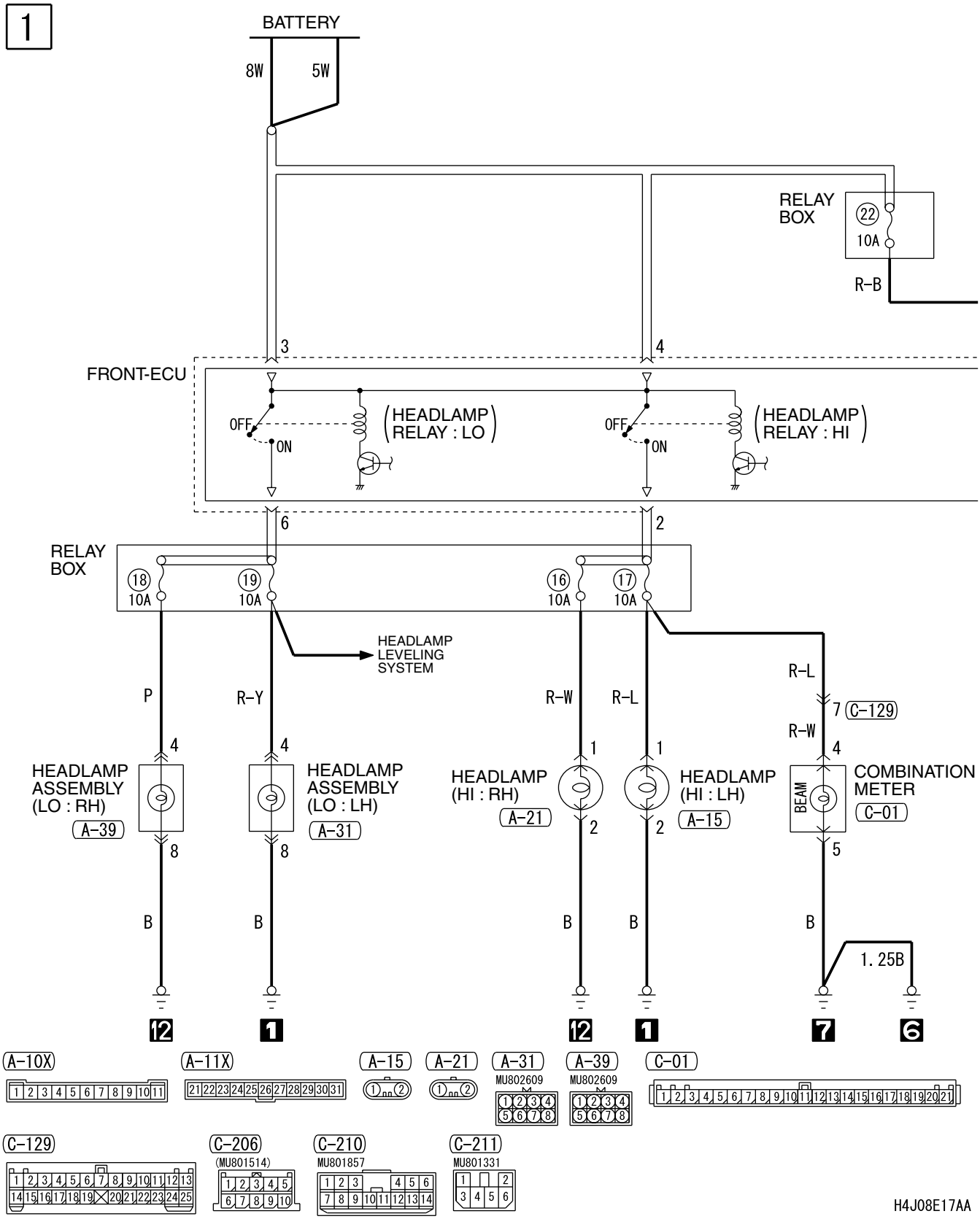

H4J08E17AA

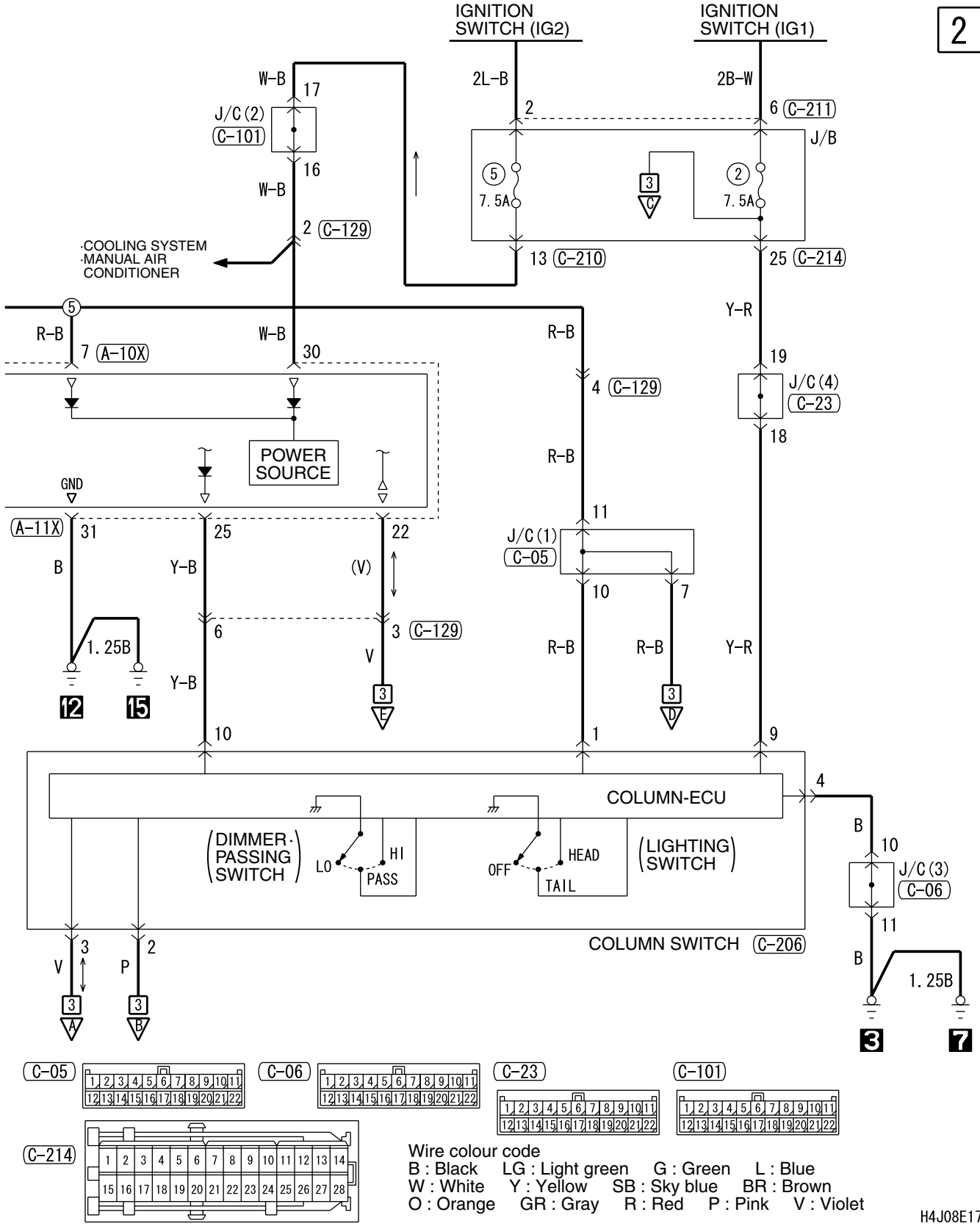
2
IGNITION SWITCH (IG2)
IGNITION SWITCH (IG1)
W-B
17
J/C (2)
C-101
16
W-B
2 C-129
·COOLING SYSTEM
·MANUAL AIR CONDITIONER
2L-B
2
13 C-210
2B-W
6 C-211
J/B
5
7.5A
3
C
2
7.5A
25 C-214
Y-R
19
J/C (4)
C-23
18
R-B
7 A-10X
W-B
30
R-B
4 C-129
R-B
11
J/C (1)
C-05
10
7
R-B
R-B
Y-R
POWER SOURCE
GND
A-11X
31
25
22
B
Y-B
(V)
6
3 C-129
V
Y-B
1.25B
12
15
3
E
3
D
10
1
9
COLUMN-ECU
4
B
10
J/C (3)
C-06
11
B
1.25B
3
7
DIMMER·PASSING SWITCH
LO
HI
PASS
OFF
HEAD
TAIL
LIGHTING SWITCH
COLUMN SWITCH C-206
V
3
P
2
3
A
3
B
C-05
C-06
C-23
C-101
C-214
Wire colour code
B : Black LG : Light green G : Green L : Blue
W : White Y : Yellow SB : Sky blue BR : Brown
O : Orange GR : Gray R : Red P : Pink V : Violet
H4J08E17AB

HEADLAMP <LH drive vehicles> (CONTINUED)

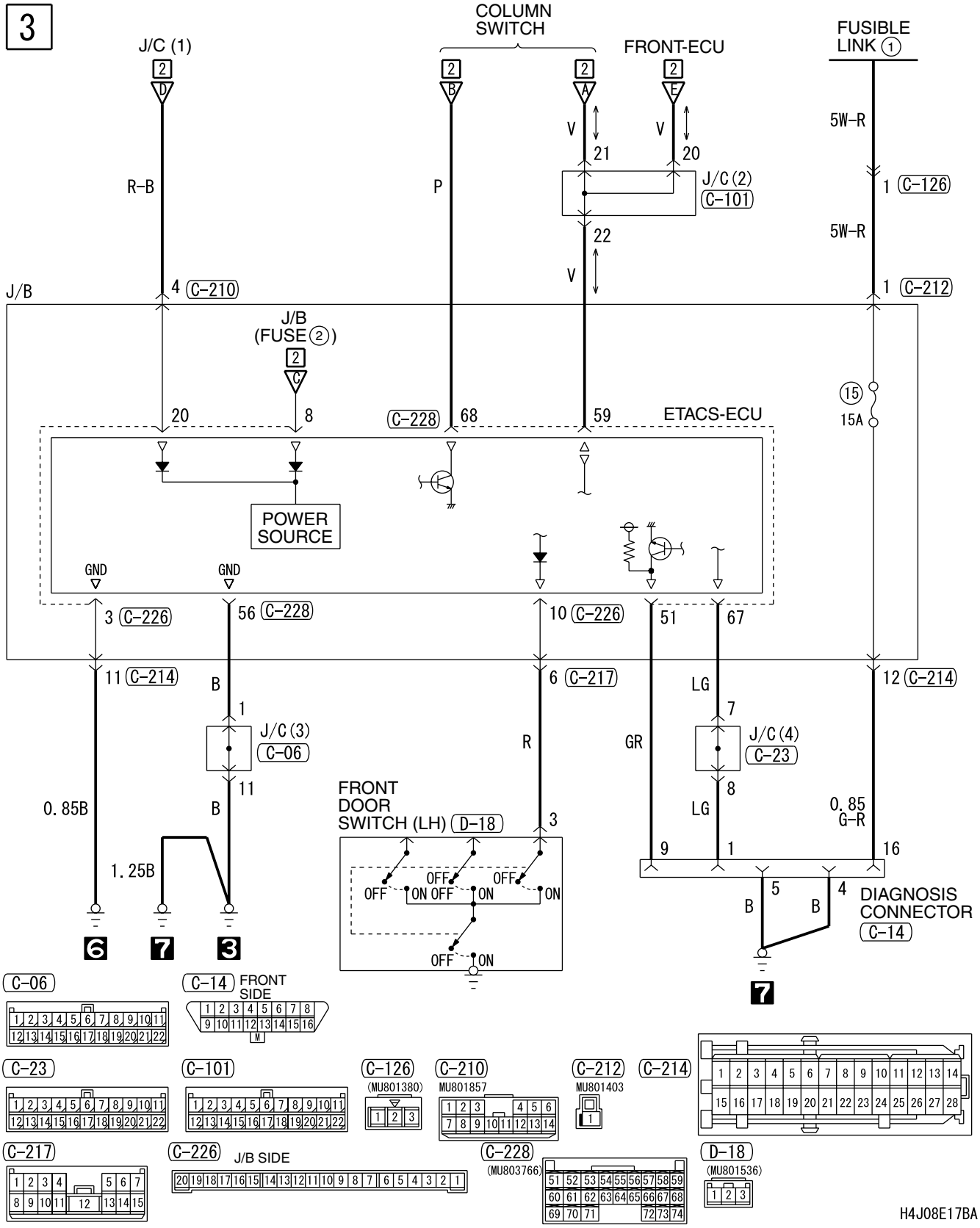

NOTES

HEADLAMP <RH drive vehicles>

M3030001500816

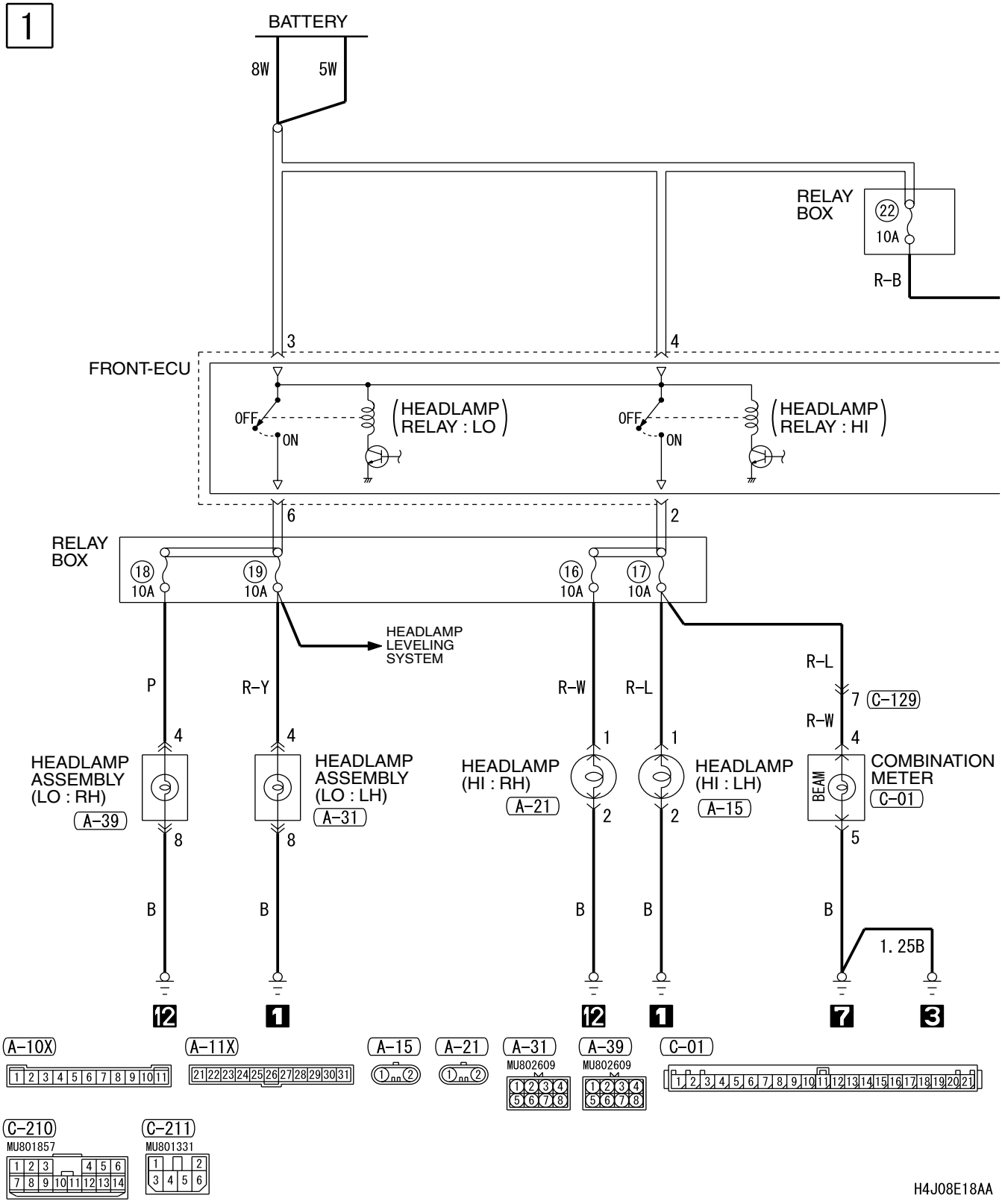

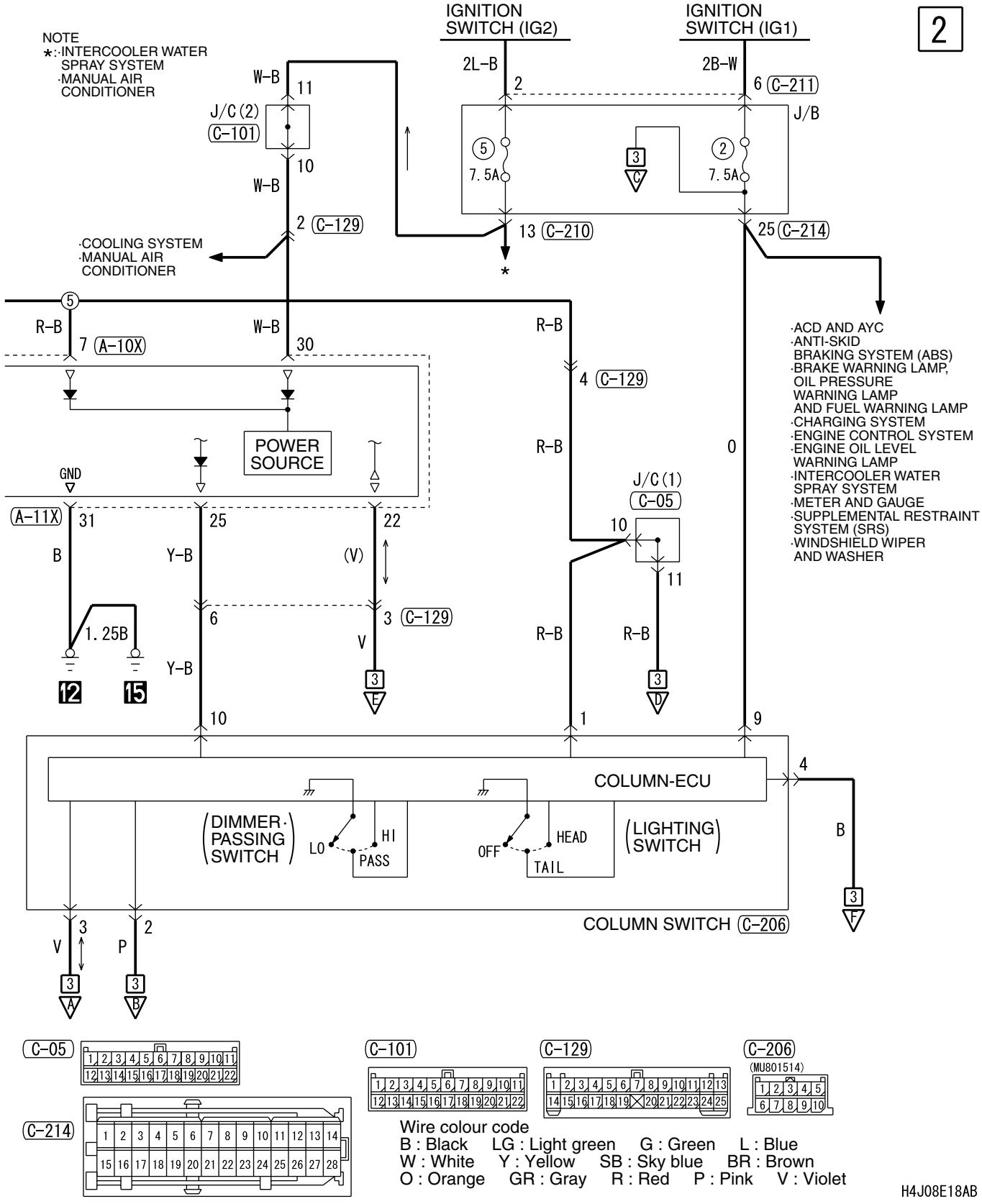
2
NOTE
★:·INTERCOOLER WATER SPRAY SYSTEM
·MANUAL AIR CONDITIONER
IGNITION SWITCH (IG2)
IGNITION SWITCH (IG1)
2L-B
2B-W
W-B
11
J/C (2)
C-101
10
W-B
2 C-129
2
6 C-211
J/B
5
7.5A
3
C
2
7.5A
13 C-210
25 C-214
·COOLING SYSTEM
·MANUAL AIR CONDITIONER
·ACD AND AYC
·ANTI-SKID BRAKING SYSTEM (ABS)
·BRAKE WARNING LAMP, OIL PRESSURE WARNING LAMP AND FUEL WARNING LAMP
·CHARGING SYSTEM
·ENGINE CONTROL SYSTEM
·ENGINE OIL LEVEL WARNING LAMP
·INTERCOOLER WATER SPRAY SYSTEM
·METER AND GAUGE
·SUPPLEMENTAL RESTRAINT SYSTEM (SRS)
·WINDSHIELD WIPER AND WASHER
R-B
7 A-10X
W-B
30
R-B
4 C-129
POWER SOURCE
R-B
0
GND
J/C (1)
C-05
A-11X
31
25
22
10
11
B
Y-B
(V)
6
3 C-129
1.25B
V
R-B
R-B
12
15
3
E
3
D
Y-B
10
1
9
4
COLUMN-ECU
DIMMER·PASSING SWITCH
LO
HI
PASS
OFF
HEAD
TAIL
LIGHTING SWITCH
B
3
F
COLUMN SWITCH C-206
V
3
P
2
3
A
3
B
C-05
C-101
C-129
C-206
(MU801514)
C-214
Wire colour code
B : Black LG : Light green G : Green L : Blue
W : White Y : Yellow SB : Sky blue BR : Brown
O : Orange GR : Gray R : Red P : Pink V : Violet
H4J08E18AB

HEADLAMP <RH drive vehicles> (CONTINUED)

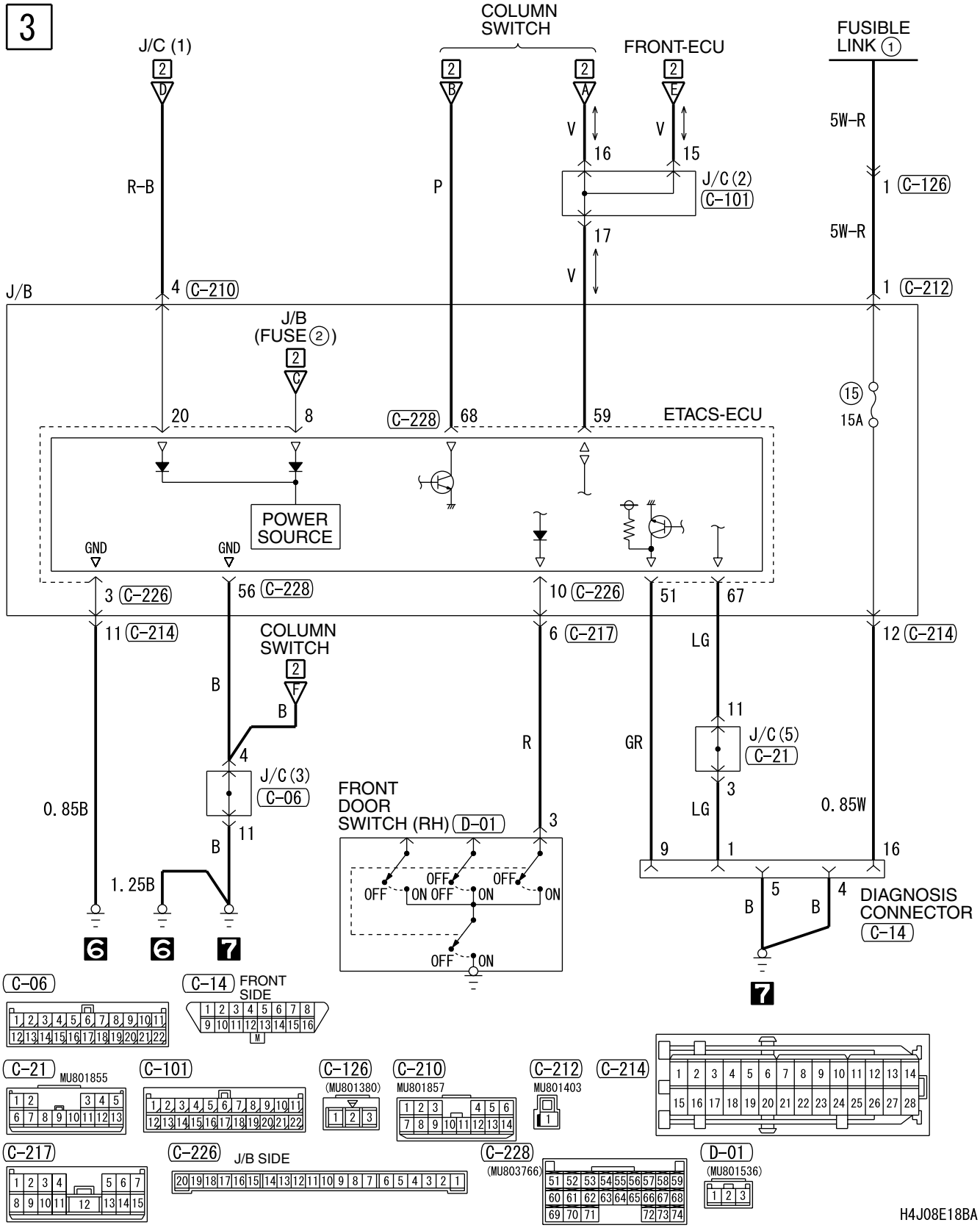

NOTES

TAIL LAMP, POSITION LAMP, LICENCE PLATE LAMP AND LIGHTING MONITOR BUZZER

TAIL LAMP, POSITION LAMP, LICENCE PLATE LAMP AND LIGHTING MONITOR BUZZER <LH drive vehicles>

M3030001700285

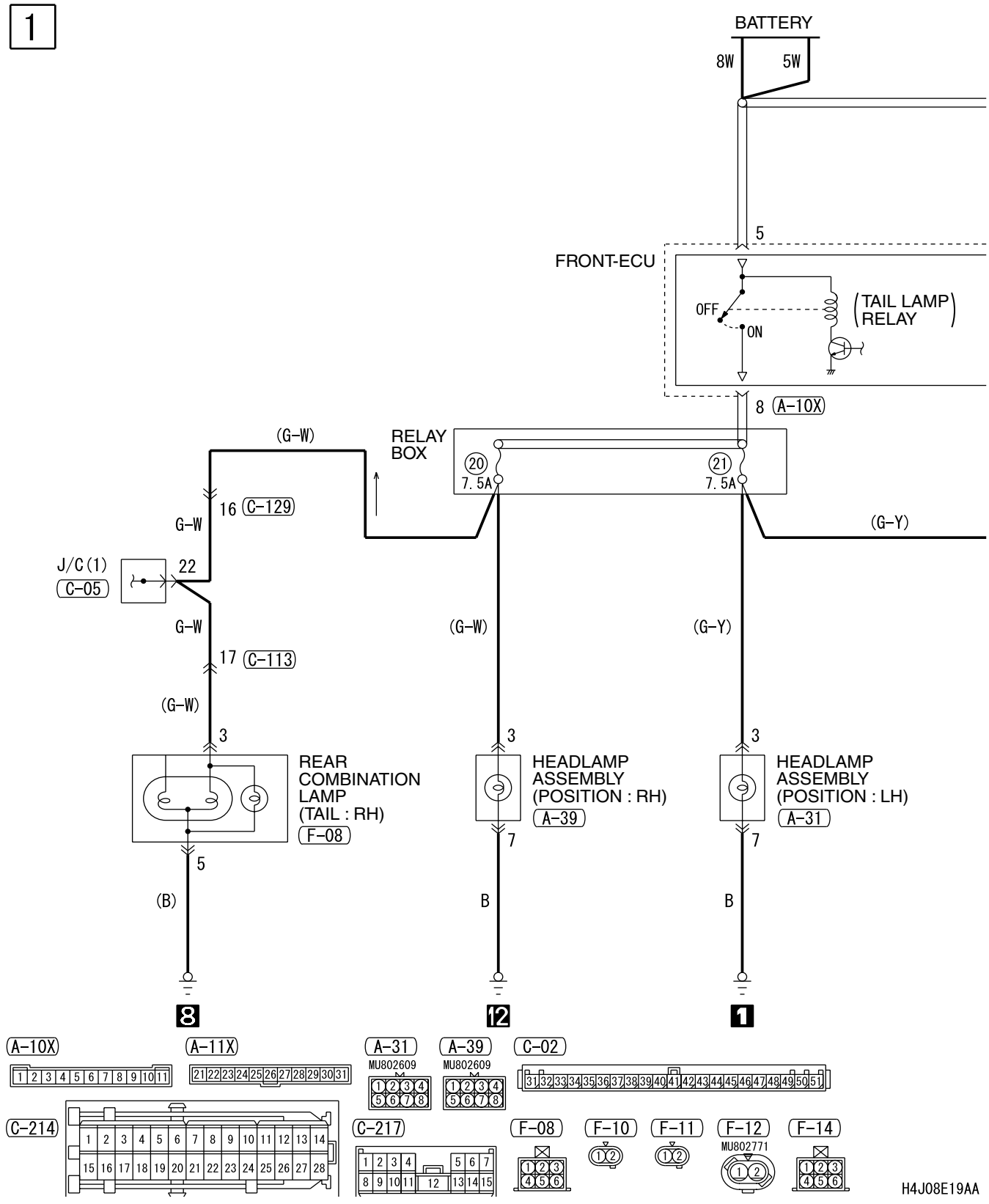

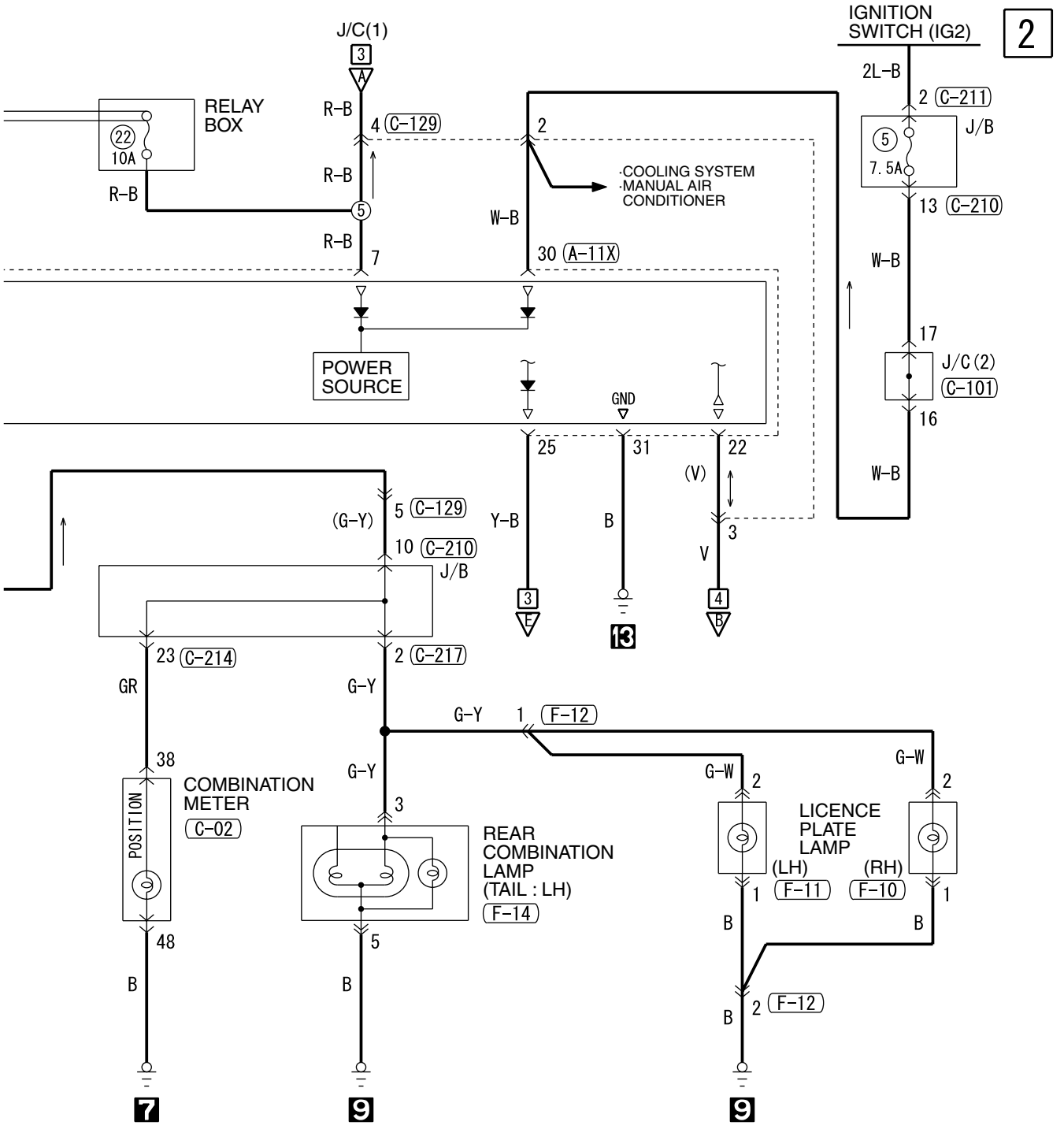

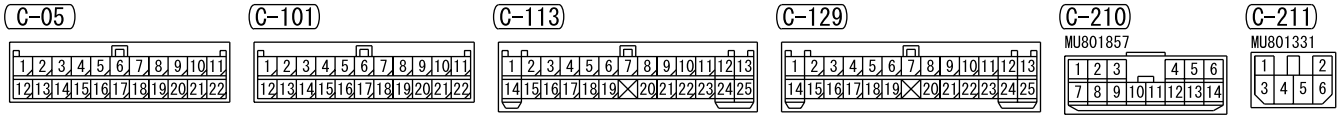

Wire colour code
B : Black LG : Light green G : Green L : Blue W : White Y : Yellow SB : Sky blue
BR : Brown O : Orange GR : Gray R : Red P : Pink V : Violet

H4J08E19AB

TAIL LAMP, POSITION LAMP, LICENCE PLATE LAMP AND LIGHTING MONITOR BUZZER <LH drive vehicles> (CONTINUED)

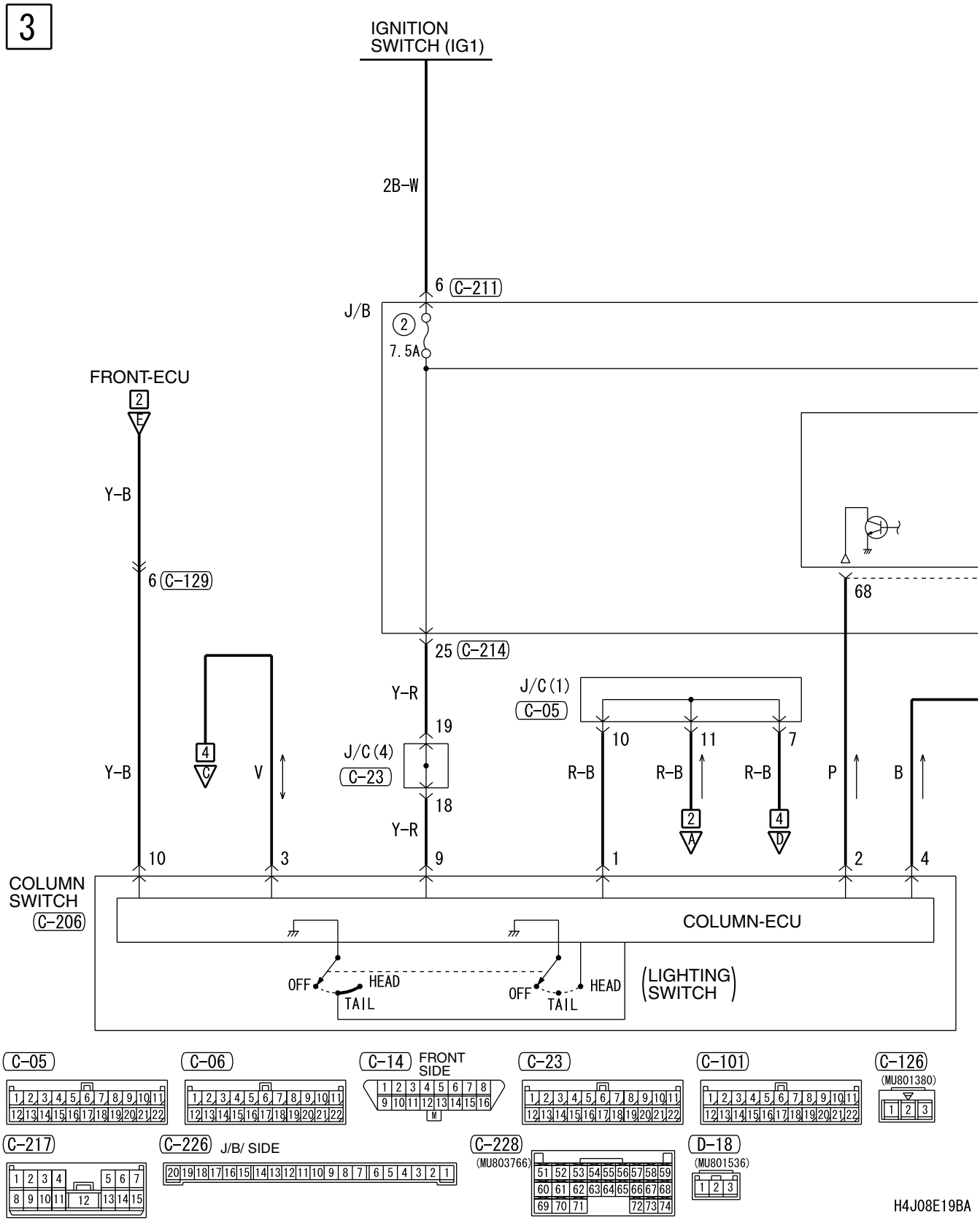

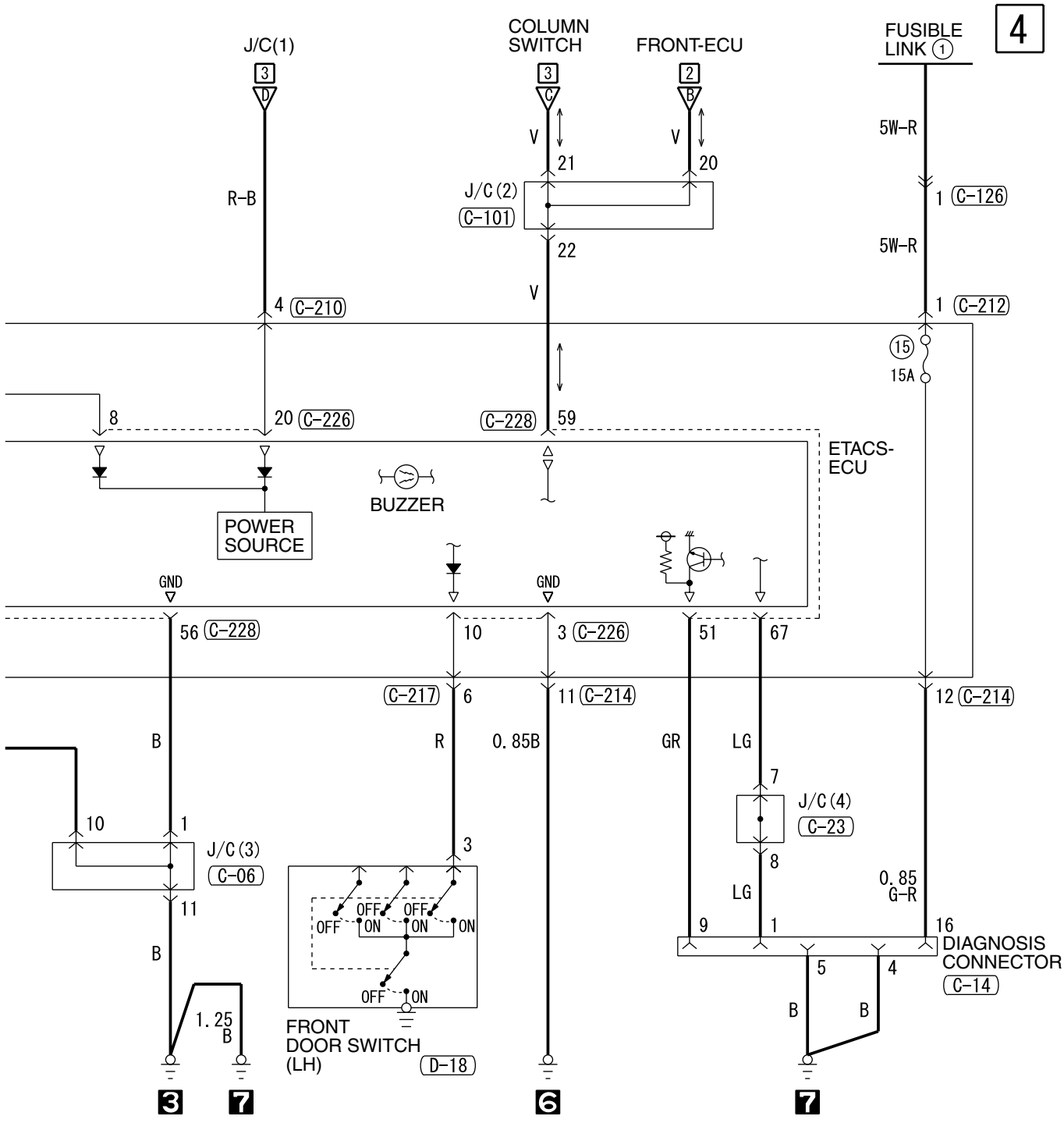

Wire colour code
B : Black LG : Light green G : Green L : Blue
W : White Y : Yellow SB : Sky blue BR : Brown
O : Orange GR : Gray R : Red P : Pink V : Violet

H4J08E19BB

TAIL LAMP, POSITION LAMP, LICENCE PLATE LAMP AND LIGHTING MONITOR BUZZER <RH drive vehicles>

M3030001700296

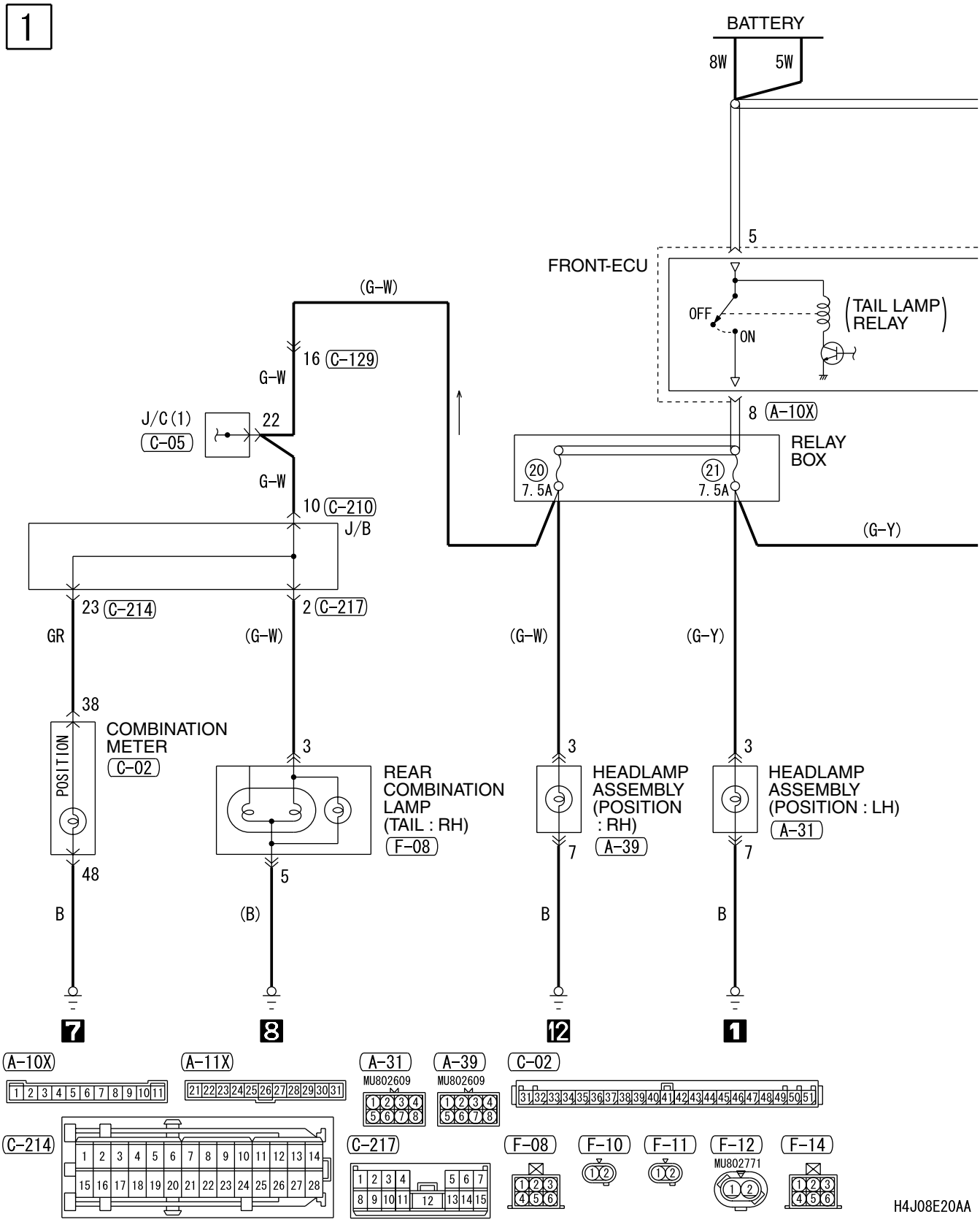

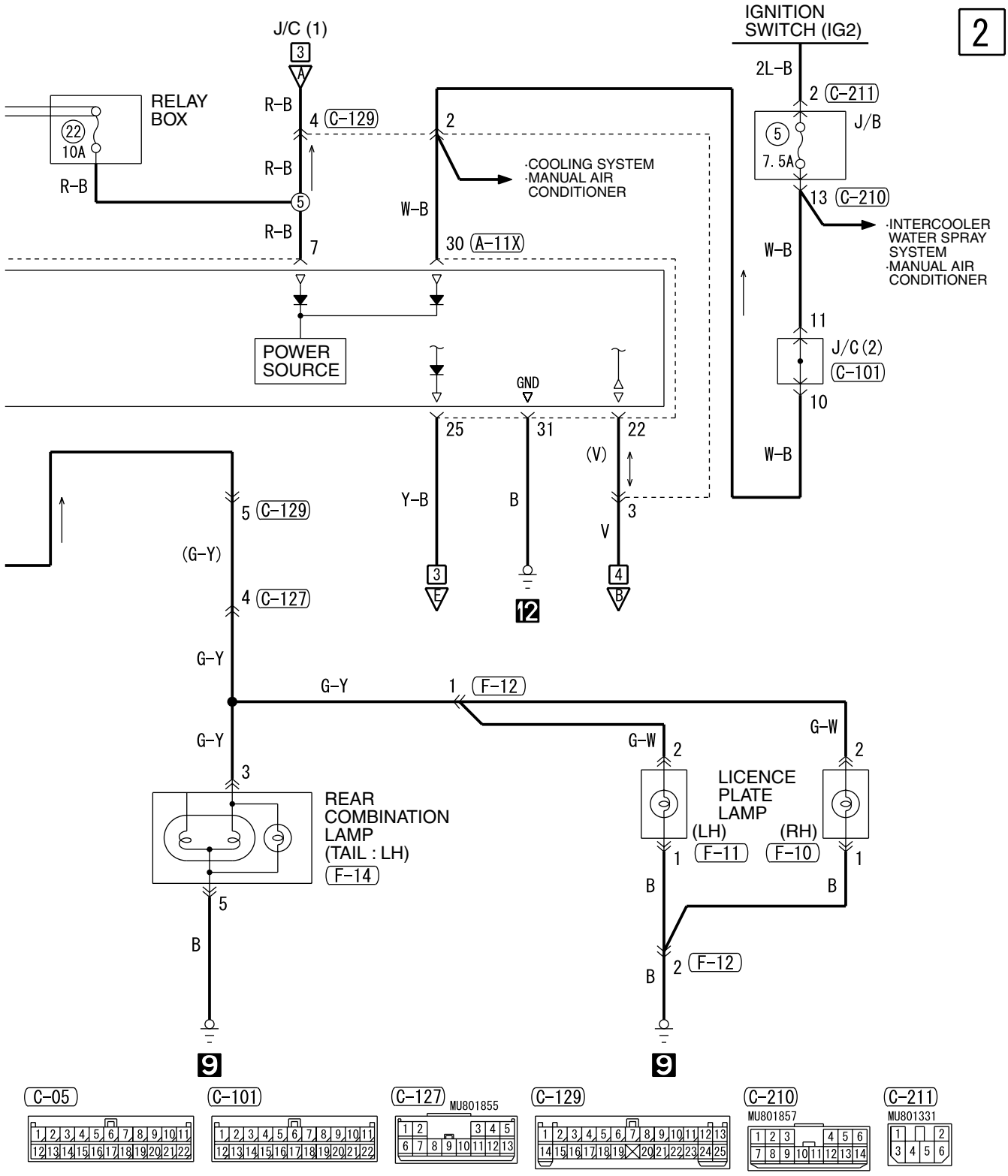

Wire colour code
B : Black LG : Light green G : Green L : Blue W : White Y : Yellow SB : Sky blue
BR : Brown O : Orange GR : Gray R : Red P : Pink V : Violet

H4J08E20AB

TAIL LAMP, POSITION LAMP, LICENCE PLATE LAMP AND LIGHTING MONITOR BUZZER <RH drive vehicles> (CONTINUED)

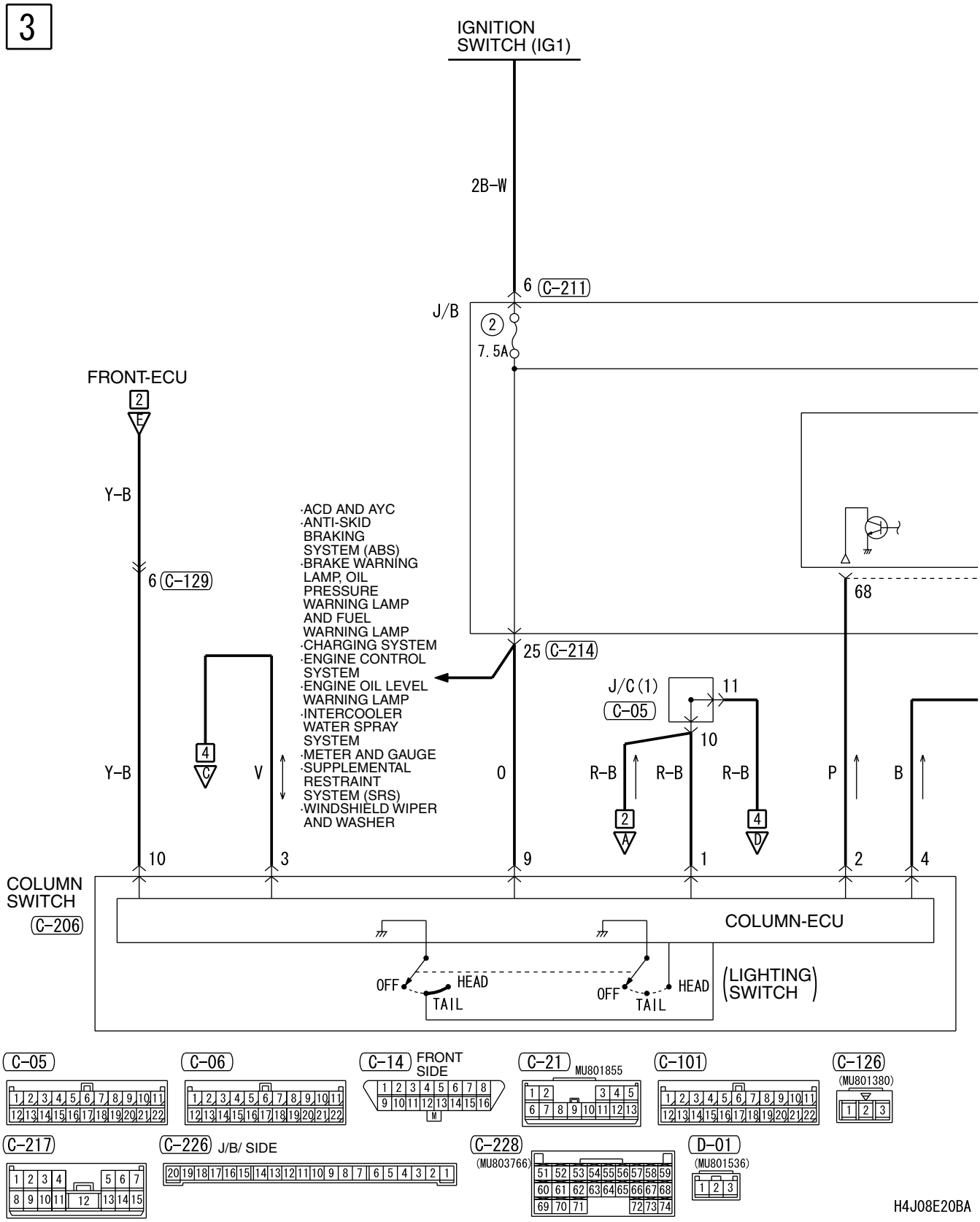

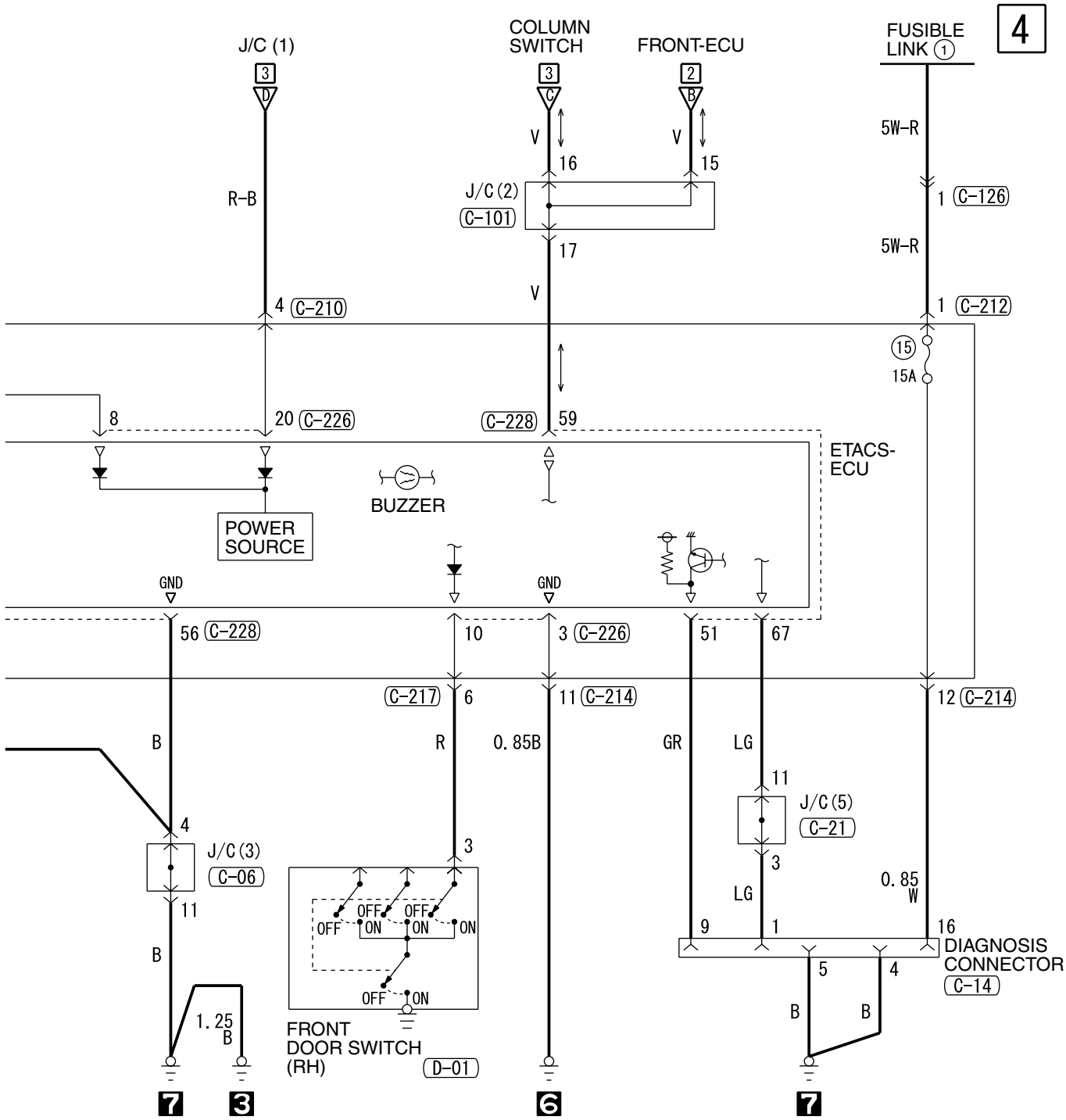
4
J/C (1)
COLUMN SWITCH
FRONT-ECU
FUSIBLE LINK (1)
3 D
3 C
2 B
V
V
16
15
R-B
J/C (2) C-101
17
5W-R
1 C-126
5W-R
V
4 C-210
1 C-212
15
15A
8
20 C-226
C-228
59
ETACS-ECU
BUZZER
POWER SOURCE
GND
GND
56 C-228
10
3 C-226
51
67
C-217
6
11 C-214
12 C-214
B
R
0.85B
GR
LG
11
J/C (5) C-21
4
J/C (3) C-06
3
3
LG
0.85 W
11
OFF
OFF
OFF
ON
ON
ON
9
1
16
DIAGNOSIS CONNECTOR C-14
5
4
B
B
B
1.25 B
OFF
ON
FRONT DOOR SWITCH (RH) D-01
7
3
6
7
C-129
C-206
(MU801514)
C-210
MU801857
C-211
MU801331
C-212
MU801403
C-214
Wire colour code
B : Black LG : Light green G : Green L : Blue
W : White Y : Yellow SB : Sky blue BR : Brown
O : Orange GR : Gray R : Red P : Pink V : Violet
H4J08E20BB

REAR FOG LAMP

REAR FOG LAMP <LH drive vehicles>

M3030012000075

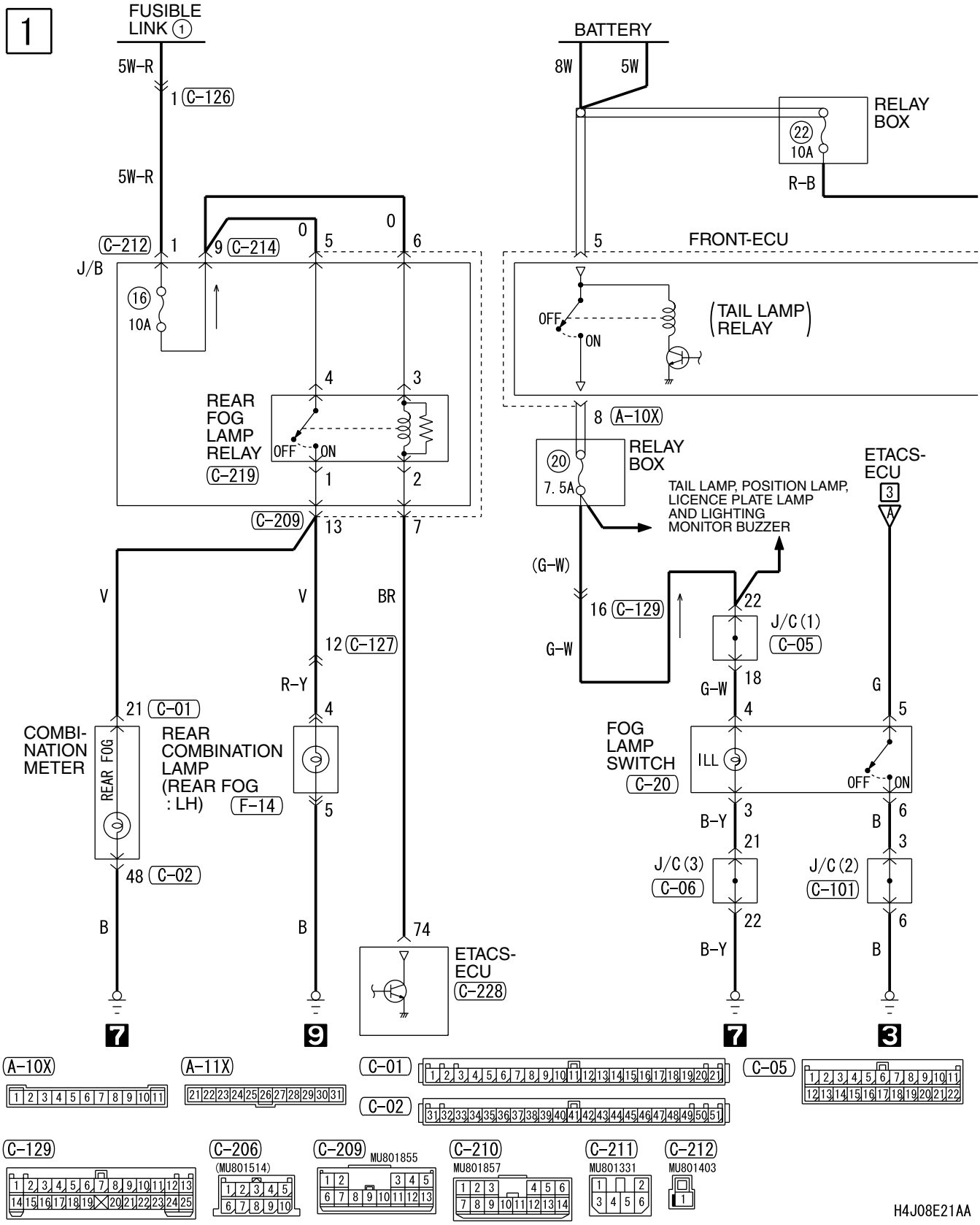

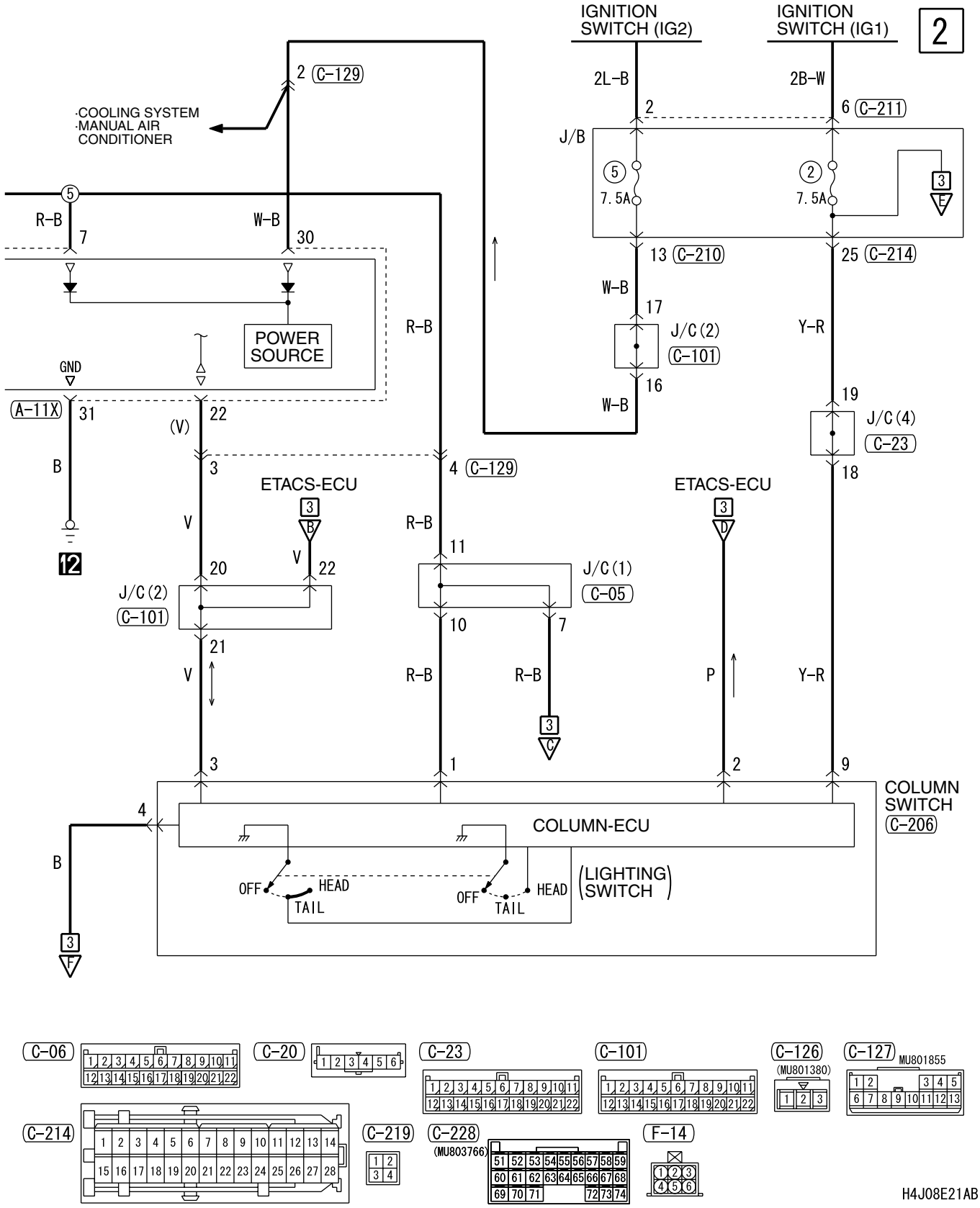
IGNITION SWITCH (IG2)
IGNITION SWITCH (IG1)
2
2 C-129
·COOLING SYSTEM
·MANUAL AIR CONDITIONER
2L-B
2B-W
2
6 C-211
J/B
5
7.5A
2
7.5A
3
E
5
R-B
7
W-B
30
13 C-210
25 C-214
W-B
17
J/C (2)
C-101
Y-R
R-B
POWER SOURCE
GND
16
W-B
19
J/C (4)
C-23
A-11X
31
22
(V)
18
B
3
4 C-129
ETACS-ECU
ETACS-ECU
3
B
3
D
V
R-B
V
11
J/C (1)
C-05
12
20
22
J/C (2)
C-101
10
7
21
V
R-B
R-B
P
Y-R
3
C
3
1
2
9
COLUMN SWITCH
C-206
4
COLUMN-ECU
B
OFF
HEAD
TAIL
OFF
HEAD
TAIL
LIGHTING SWITCH
3
F
C-06
C-20
C-23
C-101
C-126
(MU801380)
C-127
MU801855
C-214
C-219
C-228
(MU803766)
F-14

H4J08E21AB

REAR FOG LAMP <LH drive vehicles> (CONTINUED)

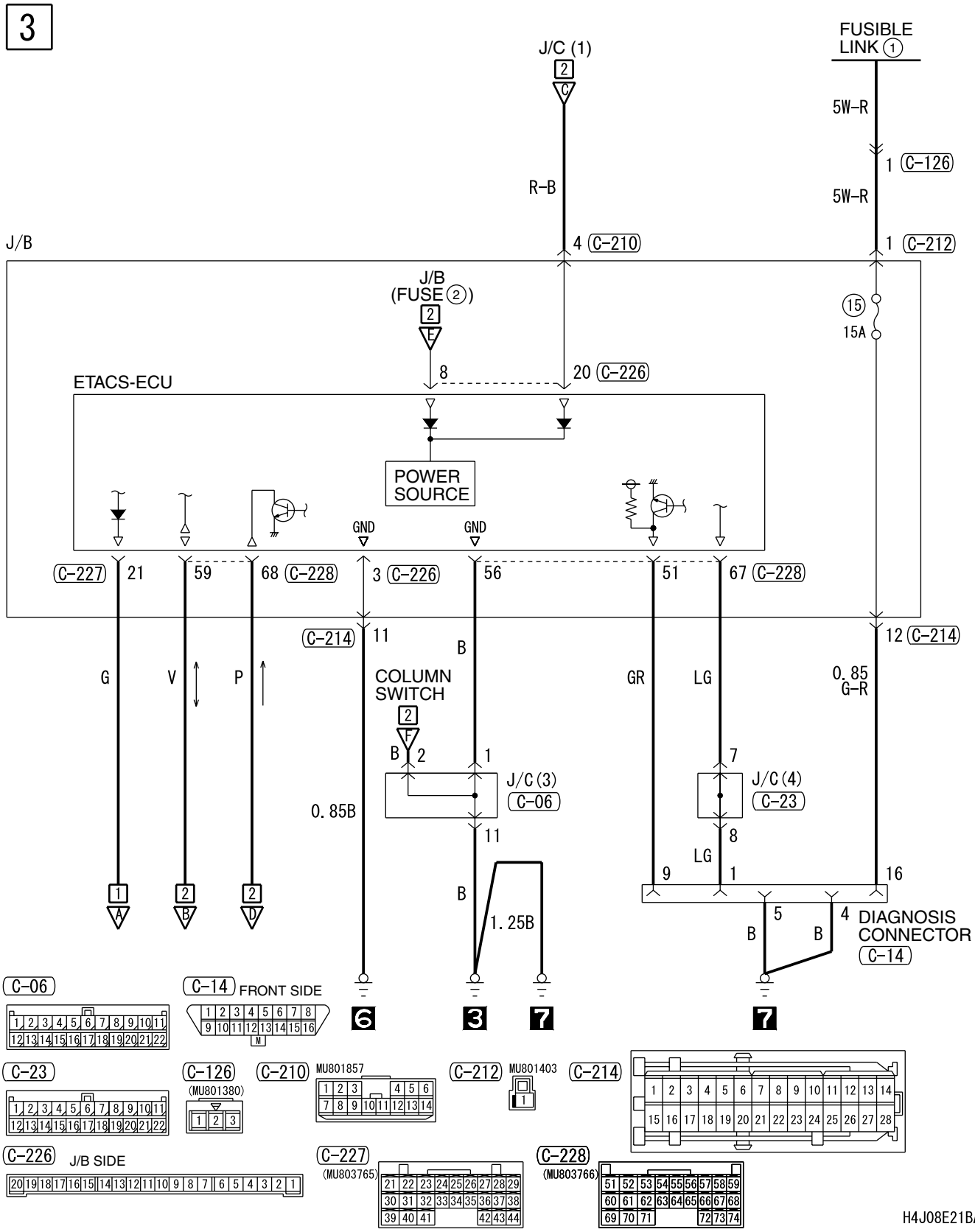

NOTES

REAR FOG LAMP <RH drive vehicles>

M3030012000086

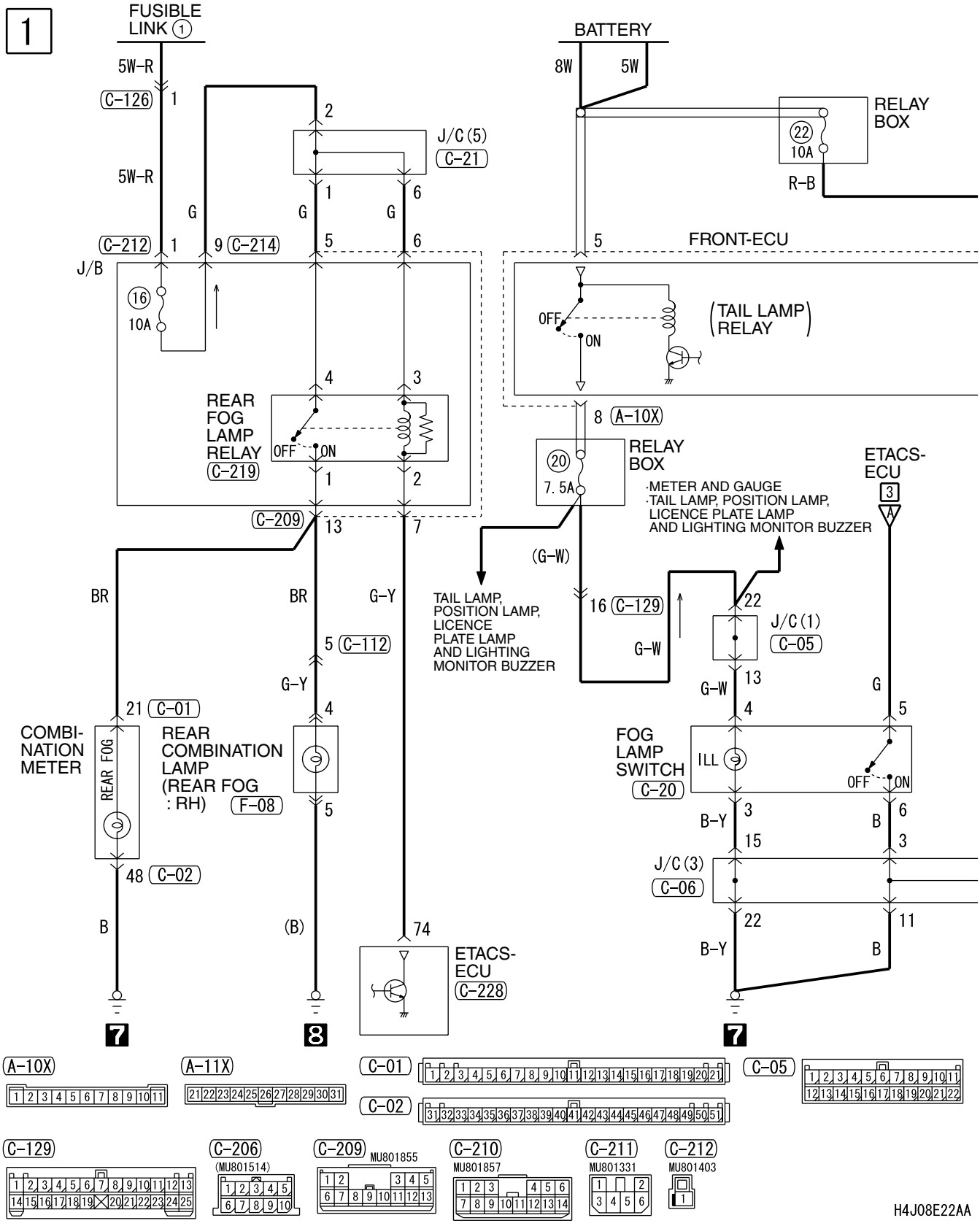

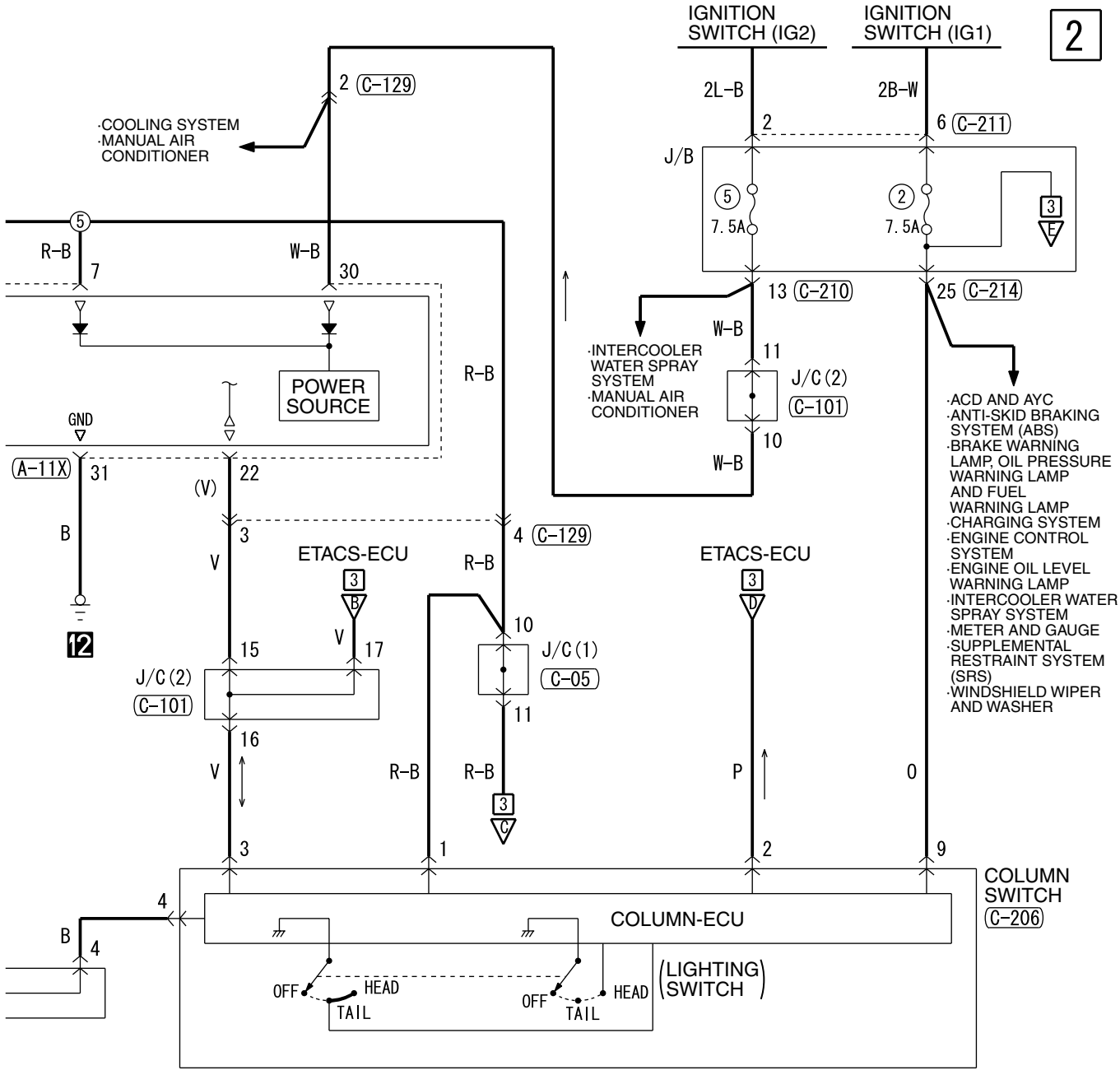
IGNITION SWITCH (IG2)
IGNITION SWITCH (IG1)
2
2L-B
2B-W
2 C-129
6 C-211
·COOLING SYSTEM
·MANUAL AIR CONDITIONER
J/B
5
7.5A
2
7.5A
3
E
R-B
W-B
7
30
13 C-210
25 C-214
POWER SOURCE
R-B
W-B
11
·INTERCOOLER WATER SPRAY SYSTEM
·MANUAL AIR CONDITIONER
J/C (2)
C-101
10
W-B
·ACD AND AYC
·ANTI-SKID BRAKING SYSTEM (ABS)
·BRAKE WARNING LAMP, OIL PRESSURE WARNING LAMP AND FUEL WARNING LAMP
·CHARGING SYSTEM
·ENGINE CONTROL SYSTEM
·ENGINE OIL LEVEL WARNING LAMP
·INTERCOOLER WATER SPRAY SYSTEM
·METER AND GAUGE
·SUPPLEMENTAL RESTRAINT SYSTEM (SRS)
·WINDSHIELD WIPER AND WASHER
GND
A-11X
31
22
(V)
B
3
4 C-129
V
ETACS-ECU
R-B
ETACS-ECU
3
B
3
D
V
10
12
15
17
J/C (2)
C-101
J/C (1)
C-05
11
16
V
R-B
R-B
P
O
3
C
3
1
2
9
COLUMN SWITCH
C-206
4
COLUMN-ECU
B
4
OFF
HEAD
TAIL
OFF
HEAD
TAIL
LIGHTING SWITCH

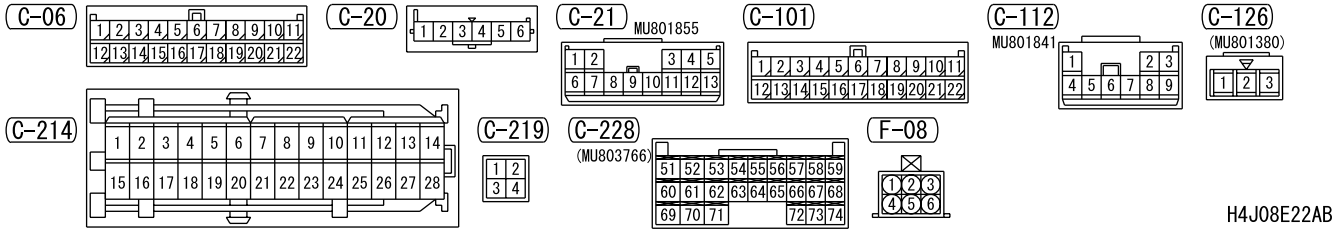
C-06
C-20
C-21
MU801855
C-101
C-112
MU801841
C-126
(MU801380)
C-214
C-219
C-228
(MU803766)
F-08

H4J08E22AB

REAR FOG LAMP <RH drive vehicles> (CONTINUED)

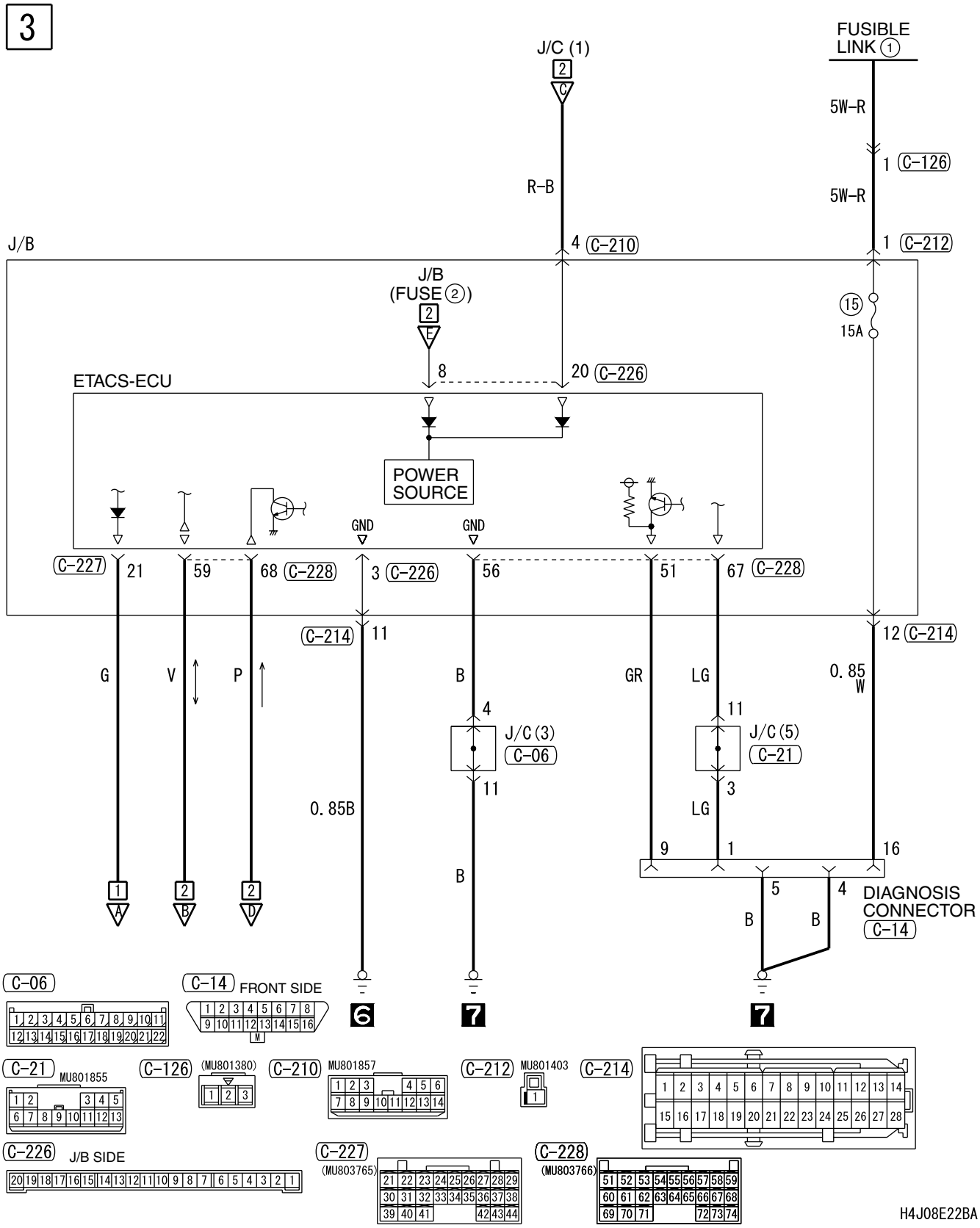

NOTES

ROOM LAMP, LUGGAGE COMPARTMENT LAMP, IGNITION KEY CYLINDER ILLUMINATION LAMP AND DOOR AJAR WARNING LAMP

FRONT ROOM LAMP, REAR ROOM LAMP, LUGGAGE COMPARTMENT LAMP, IGNITION KEY CYLINDER ILLUMINATION LAMP AND DOOR AJAR WARNING LAMP <LH drive vehicles>

M3030018800024

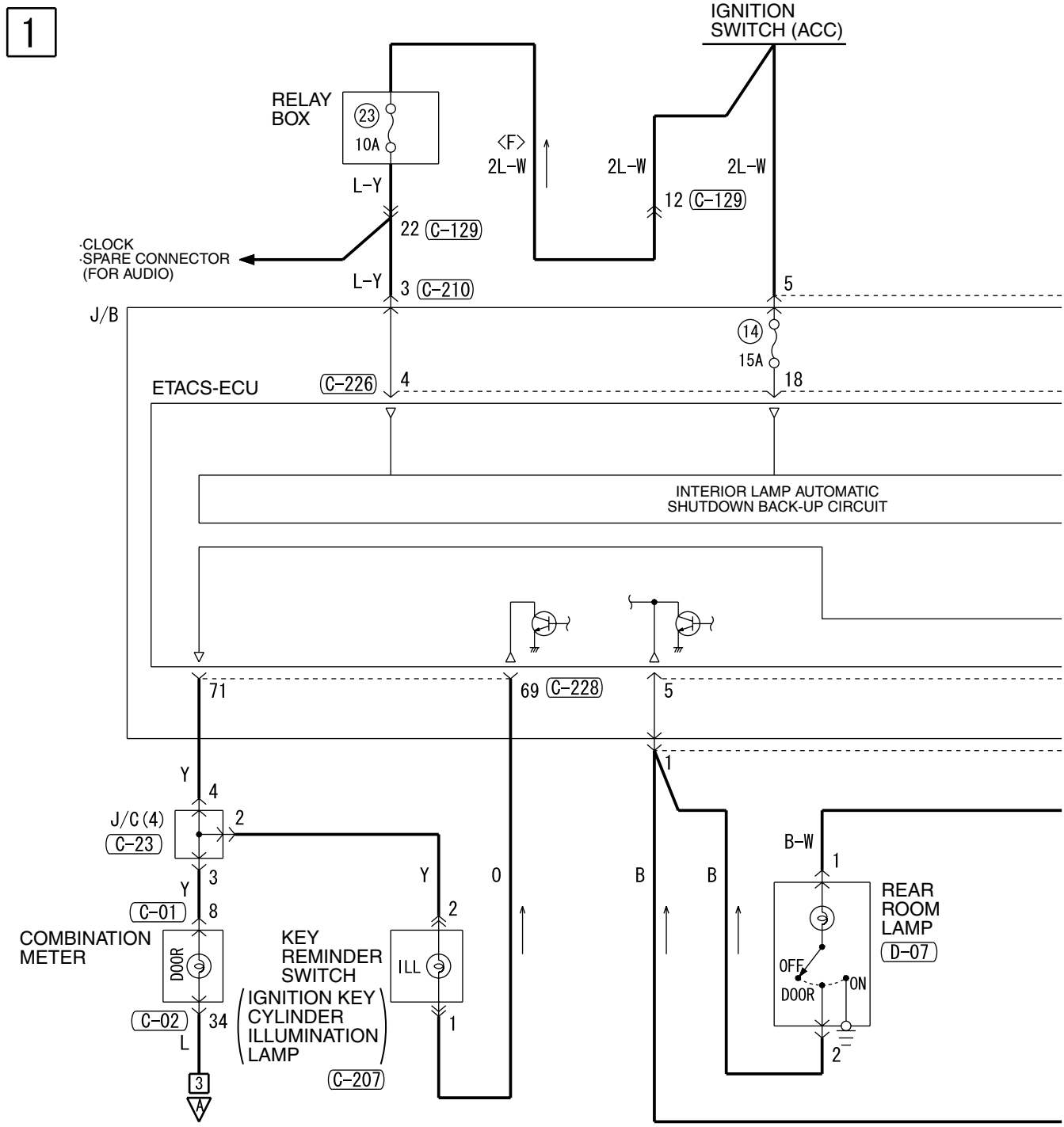

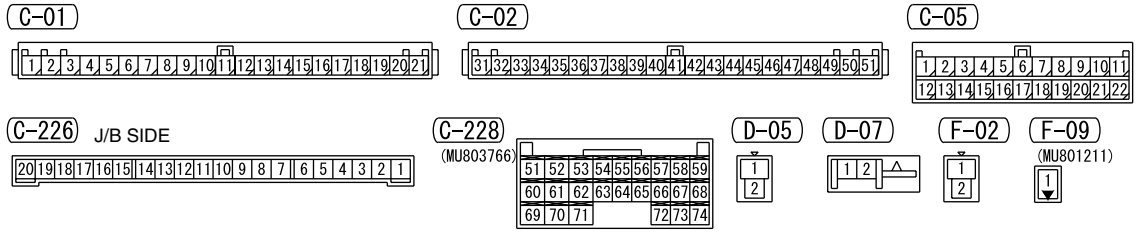

H4J08E23AA

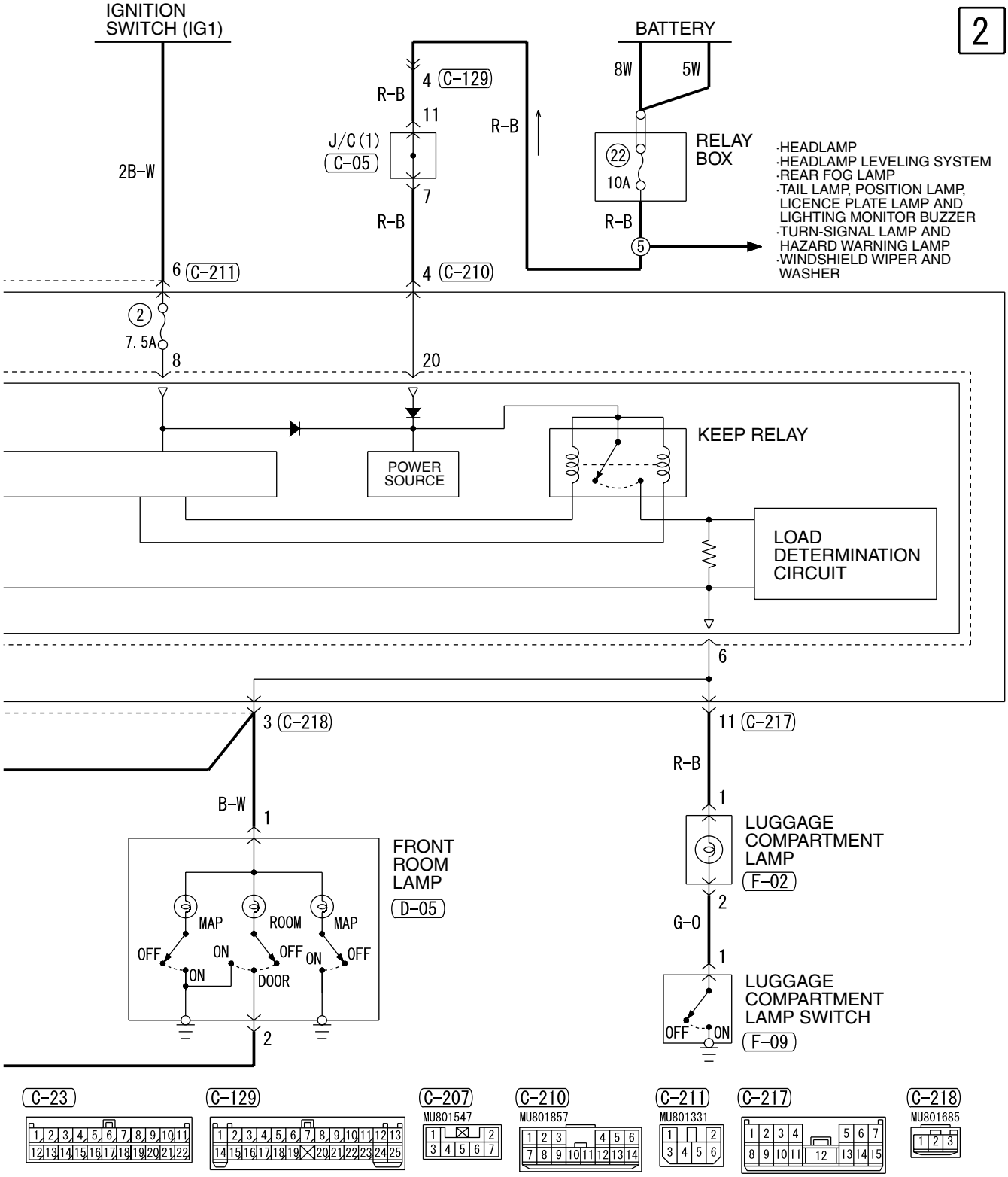

Wire colour code
B : Black LG : Light green G : Green L : Blue W : White Y : Yellow SB : Sky blue
BR : Brown O : Orange GR : Gray R : Red P : Pink V : Violet

H4J08E23AB

FRONT ROOM LAMP, REAR ROOM LAMP, LUGGAGE COMPARTMENT LAMP, IGNITION KEY CYLINDER ILLUMINATION LAMP AND DOOR AJAR WARNING LAMP <LH drive vehicles> (CONTINUED)

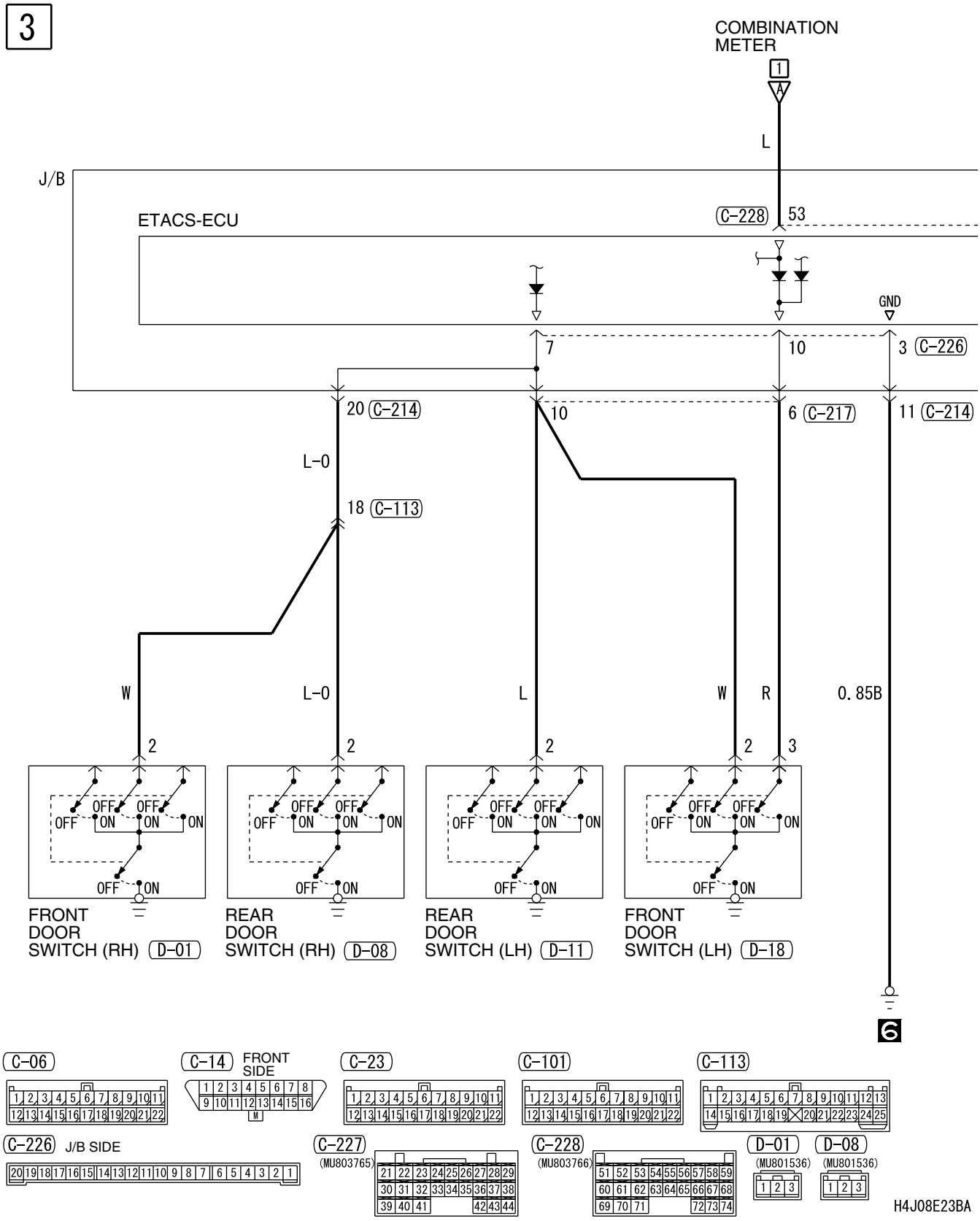

H4J08E23BA

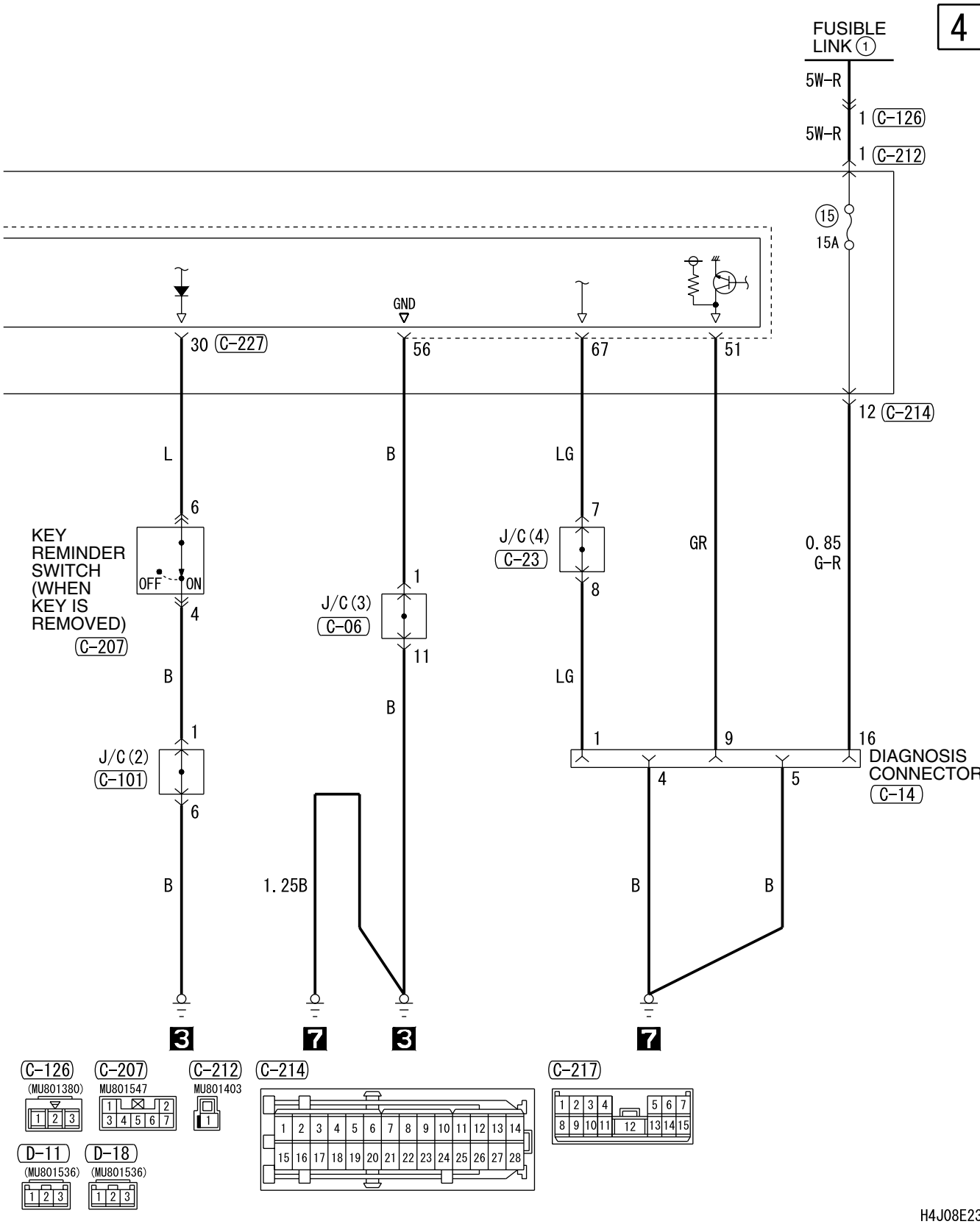
4
FUSIBLE LINK (1)
5W-R
1 (C-126)
5W-R
1 (C-212)
(15)
15A
GND
30 (C-227)
56
67
51
12 (C-214)
L
B
LG
6
7
KEY REMINDER SWITCH (WHEN KEY IS REMOVED)
(C-207)
OFF
ON
4
J/C (4)
(C-23)
GR
0.85 G-R
8
J/C (3)
(C-06)
1
11
B
LG
B
1
J/C (2)
(C-101)
6
1
9
16
DIAGNOSIS CONNECTOR
(C-14)
4
5
B
1.25B
B
B
3
7
3
7
C-126
(MU801380)
C-207
MU801547
C-212
MU801403
C-214
C-217
D-11
(MU801536)
D-18
(MU801536)

H4J08E23BB

FRONT ROOM LAMP, REAR ROOM LAMP, LUGGAGE COMPARTMENT LAMP, IGNITION KEY CYLINDER ILLUMINATION LAMP AND DOOR AJAR WARNING LAMP <RH drive vehicles>

M3030018800035

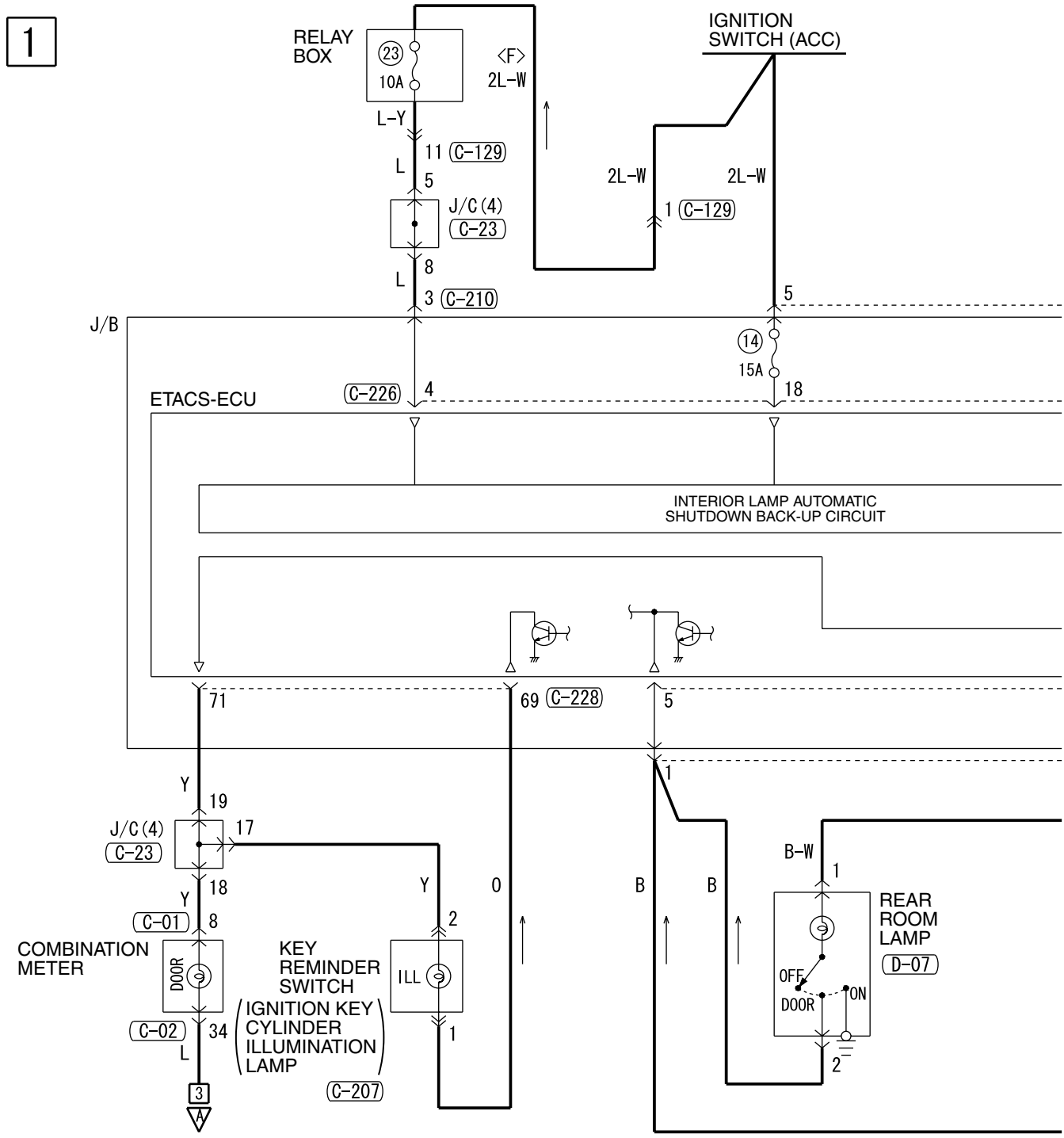

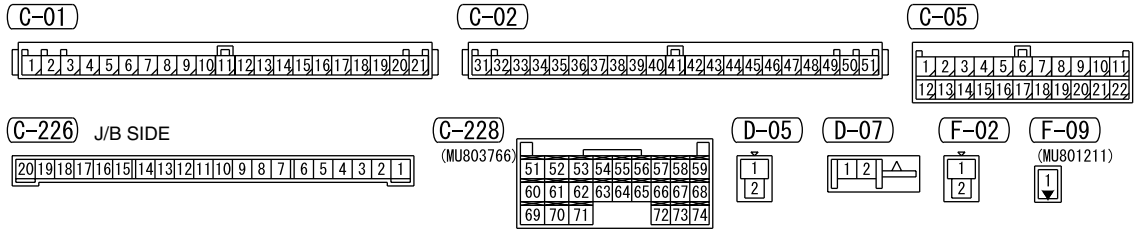

H4J08E24AA

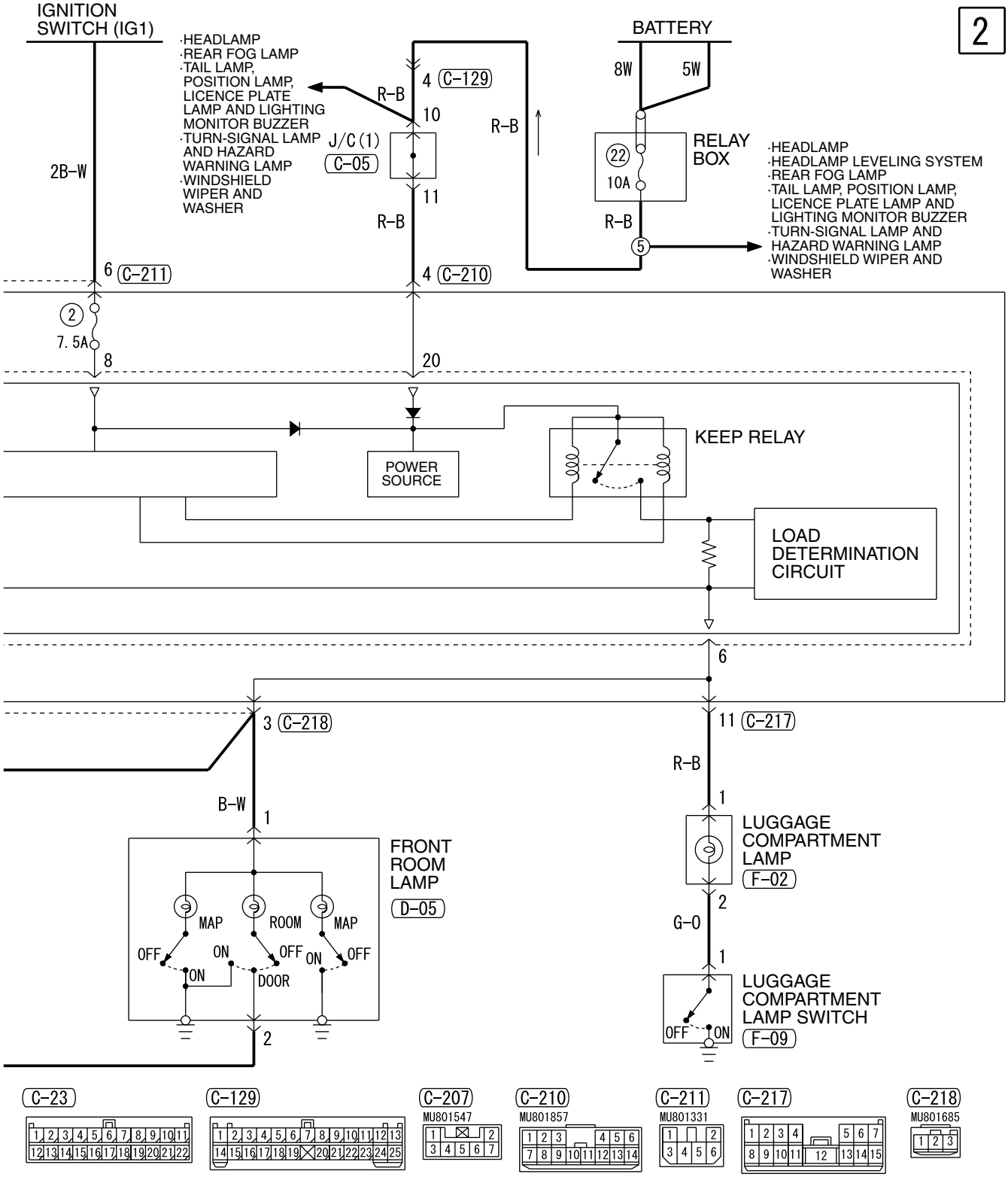

Wire colour code
B : Black LG : Light green G : Green L : Blue W : White Y : Yellow SB : Sky blue
BR : Brown O : Orange GR : Gray R : Red P : Pink V : Violet

H4J08E24AB

FRONT ROOM LAMP, REAR ROOM LAMP, LUGGAGE COMPARTMENT LAMP, IGNITION KEY CYLINDER ILLUMINATION LAMP AND DOOR AJAR WARNING LAMP <RH drive vehicles> (CONTINUED)

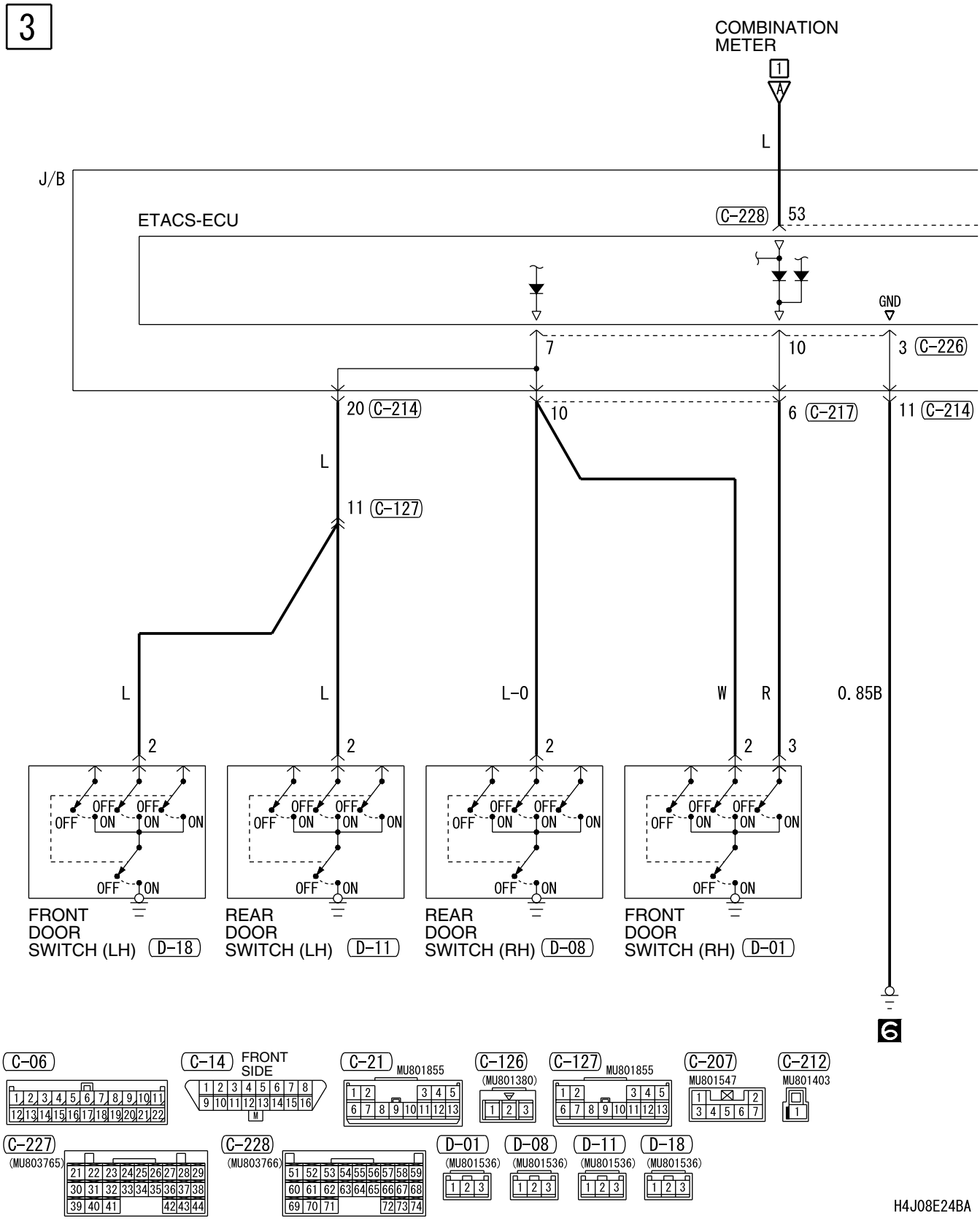

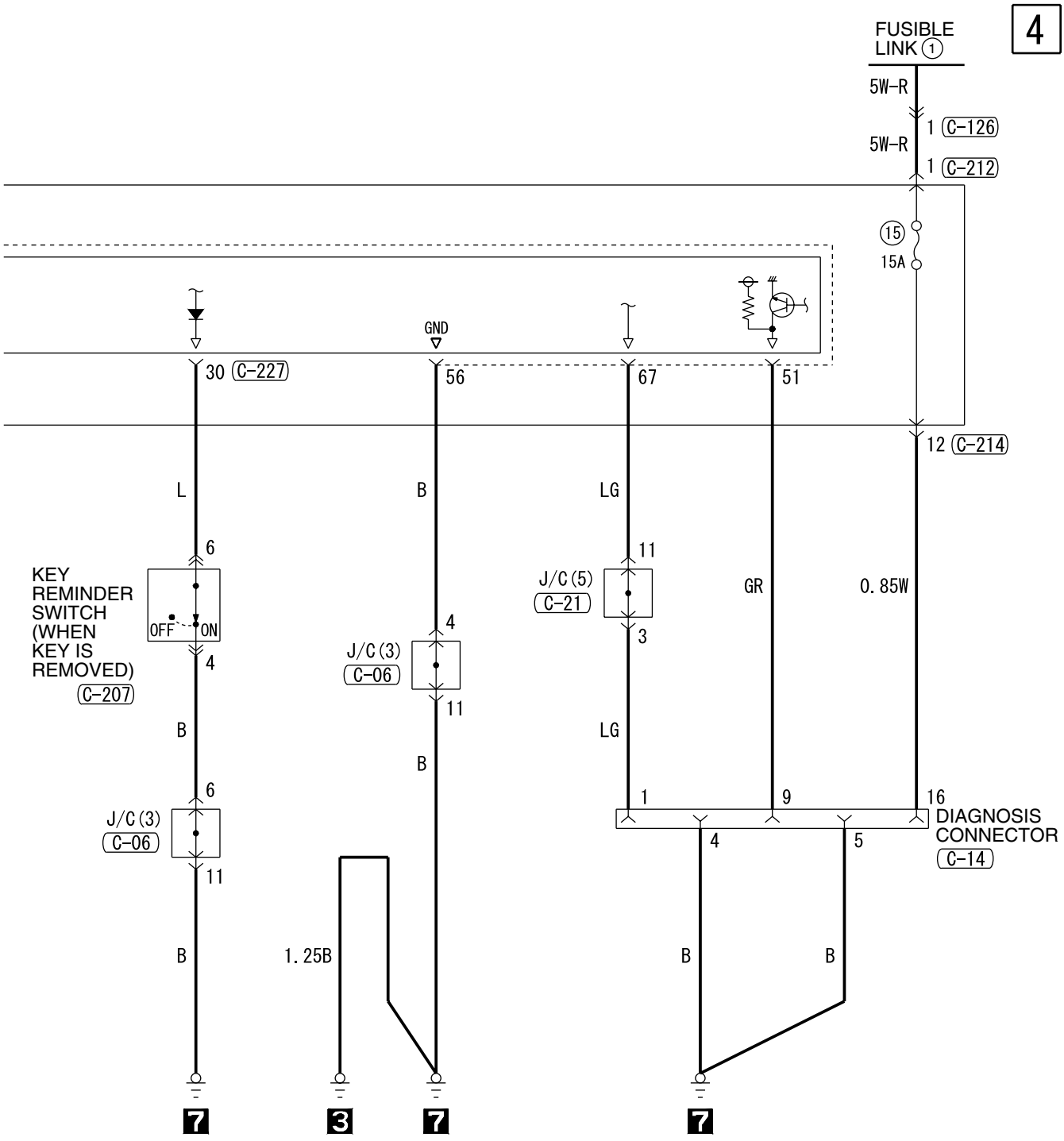

Wire colour code
B : Black LG : Light green G : Green L : Blue
W : White Y : Yellow SB : Sky blue BR : Brown
O : Orange GR : Gray R : Red P : Pink V : Violet

H4J08E24BB

HEADLAMP LEVELING SYSTEM

HEADLAMP LEVELING SYSTEM <LH drive vehicles>

M3030012500218

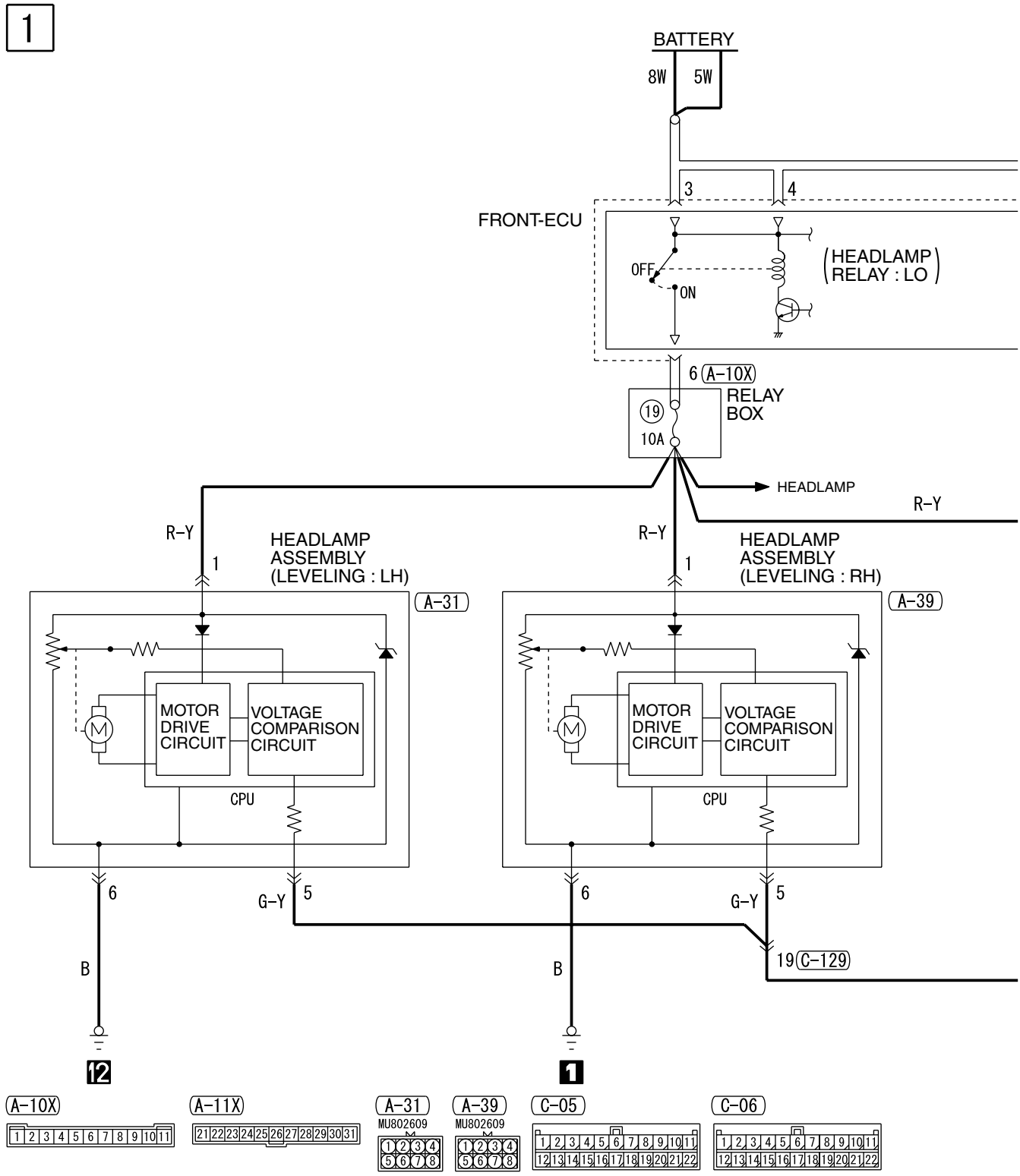

H4J08E25AA

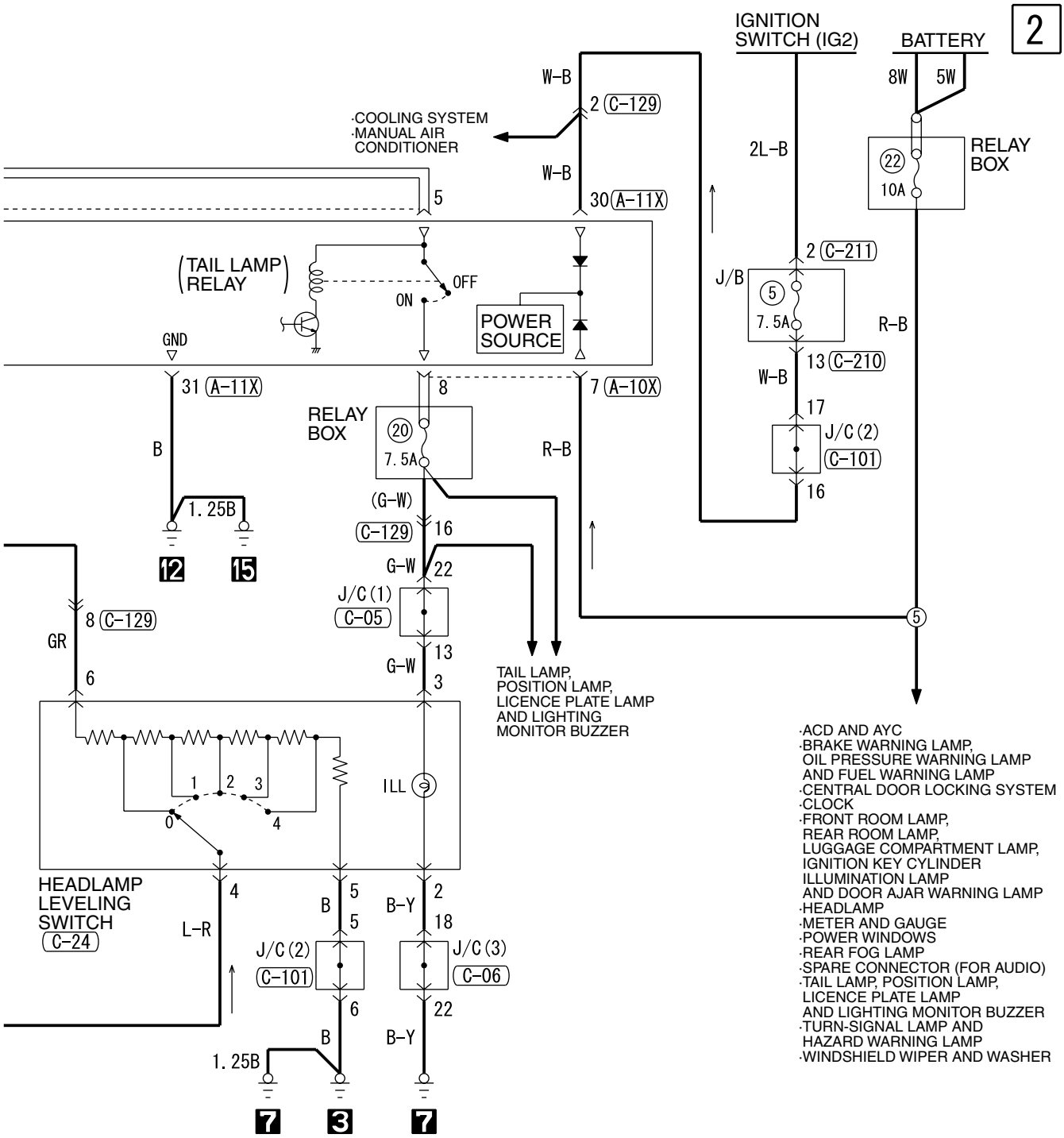

Wire colour code
B : Black LG : Light green G : Green L : Blue W : White Y : Yellow SB : Sky blue
BR : Brown O : Orange GR : Gray R : Red P : Pink V : Violet

H4J08E25AB

HEADLAMP LEVELING SYSTEM <RH drive vehicles>

M3030012500229

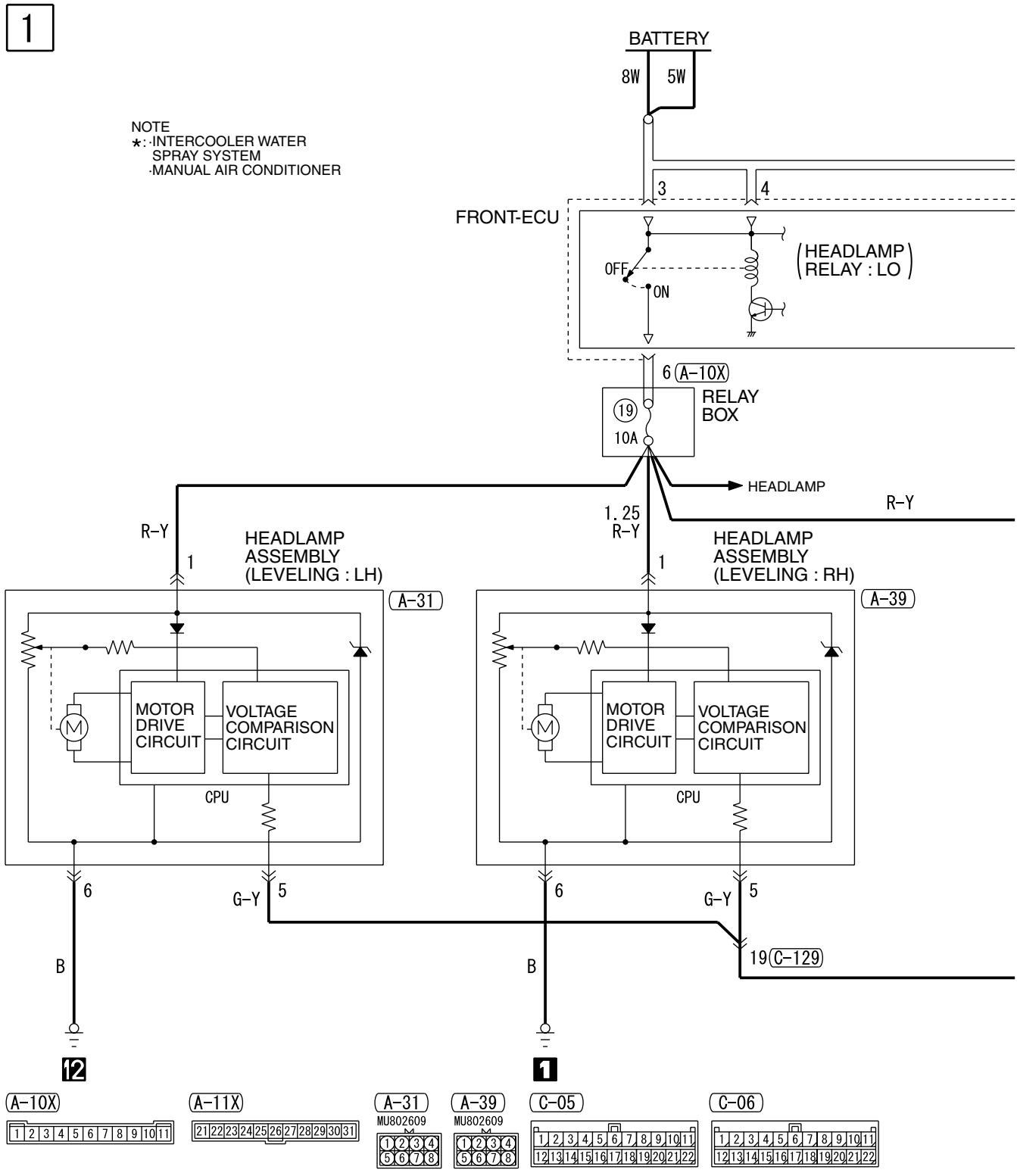

H4J08E26AA

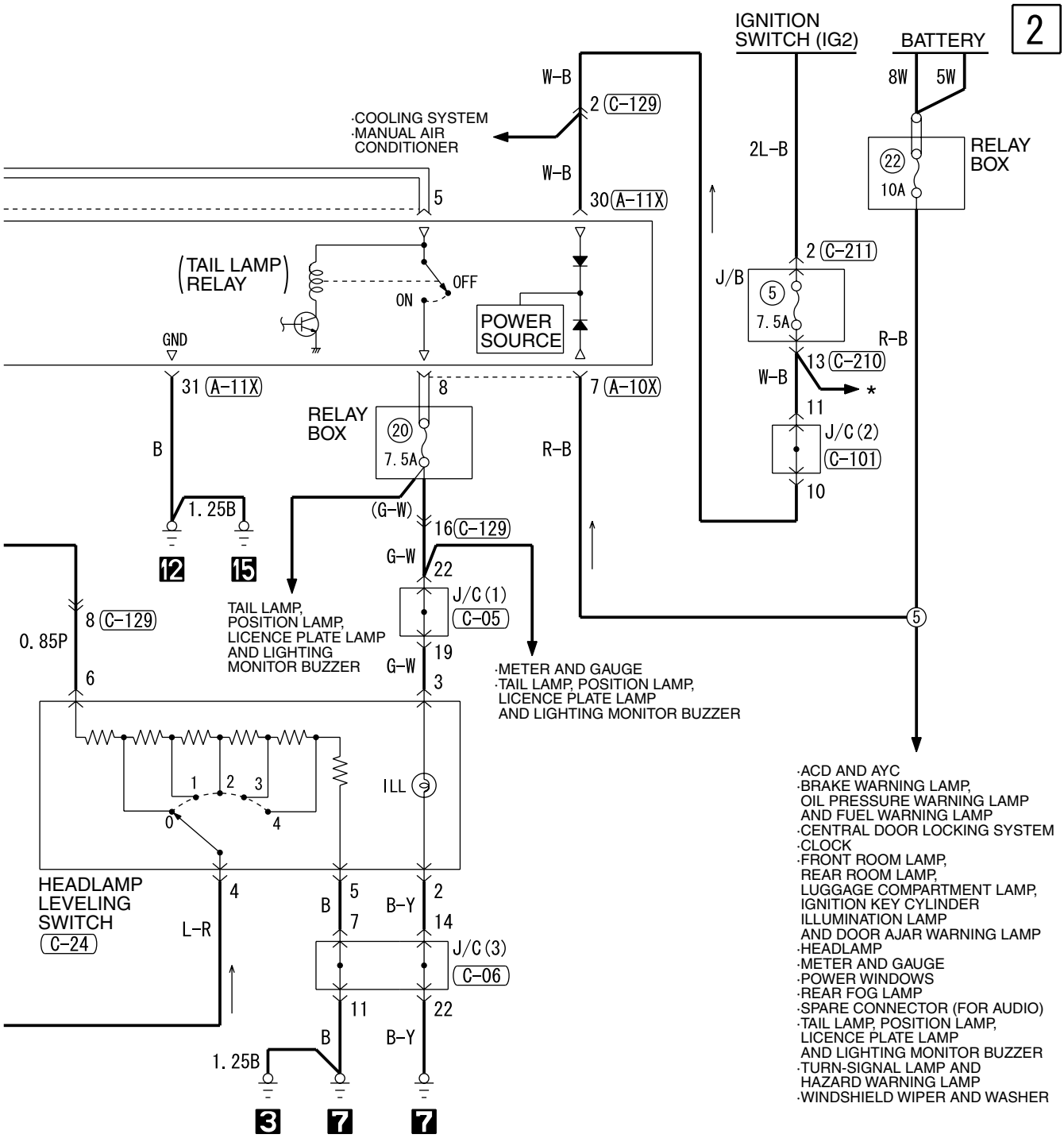

Wire colour code
B : Black LG : Light green G : Green L : Blue W : White Y : Yellow SB : Sky blue
BR : Brown O : Orange GR : Gray R : Red P : Pink V : Violet

H4J08E26AB

TURN SIGNAL LAMP AND HAZARD WARNING LAMP

TURN SIGNAL LAMP AND HAZARD WARNING LAMP <LH drive vehicles>

M3030002900516

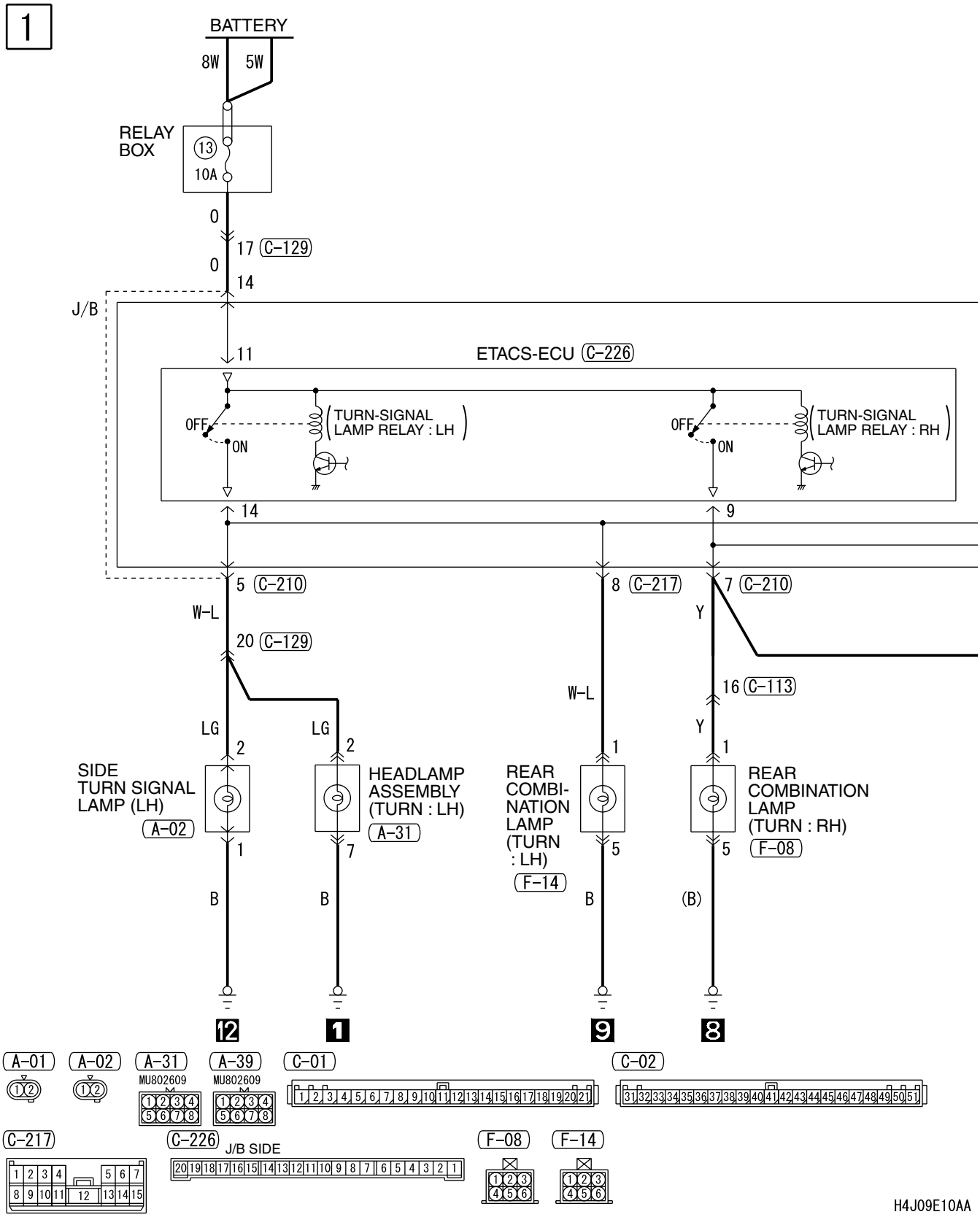

2

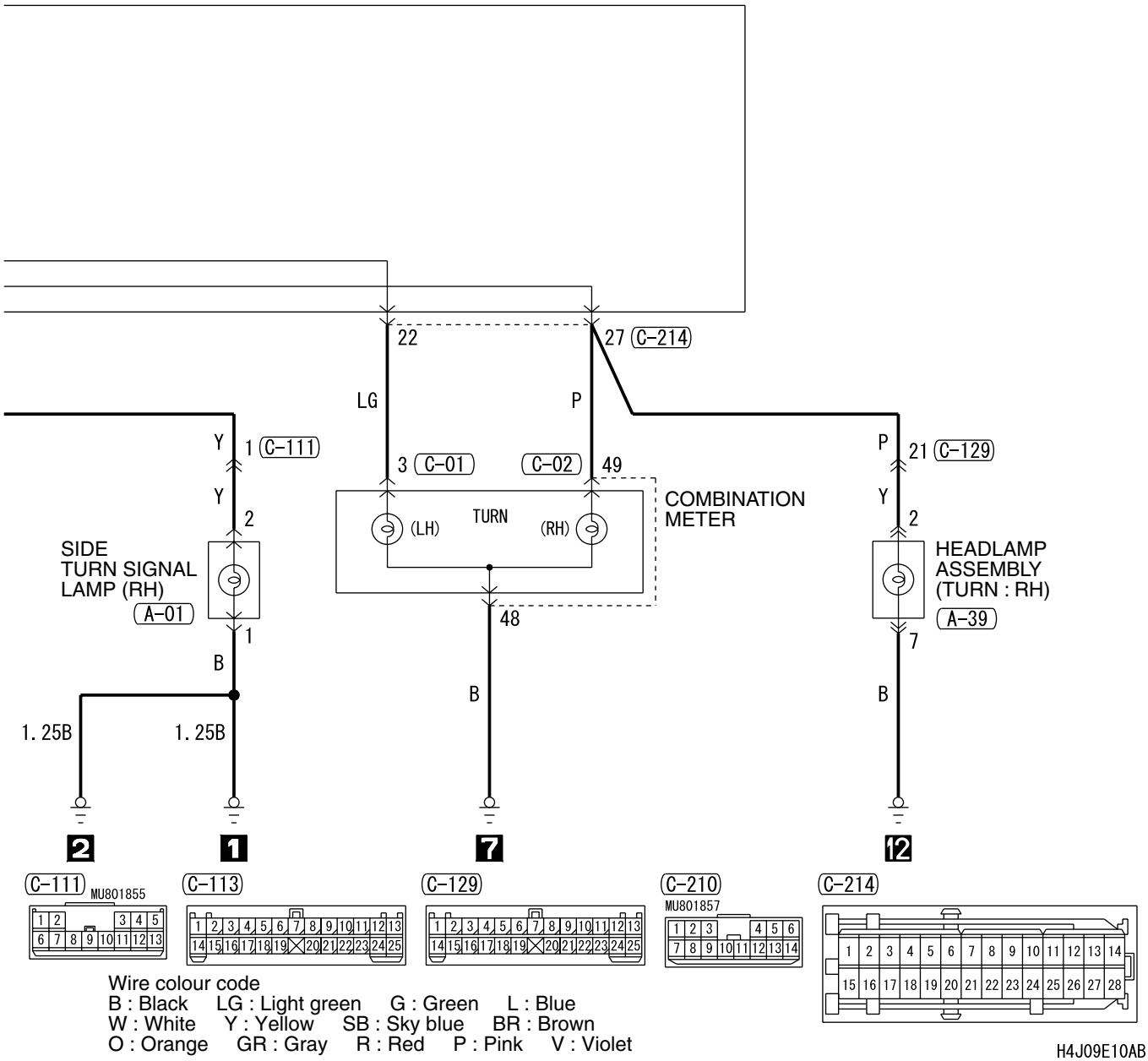
22
27 C-214
LG
P
Y
1 C-111
3 C-01
C-02
49
P
21 C-129
Y
2
COMBINATION METER
TURN
(LH)
(RH)
SIDE TURN SIGNAL LAMP (RH)
A-01
HEADLAMP ASSEMBLY (TURN : RH)
A-39
48
1
7
B
B
B
1.25B
1.25B
2
1
7
12
C-111
MU801855
C-113
C-129
C-210
MU801857
C-214
Wire colour code
B : Black LG : Light green G : Green L : Blue
W : White Y : Yellow SB : Sky blue BR : Brown
O : Orange GR : Gray R : Red P : Pink V : Violet
H4J09E10AB

TURN SIGNAL LAMP AND HAZARD WARNING LAMP <LH drive vehicles> (CONTINUED)

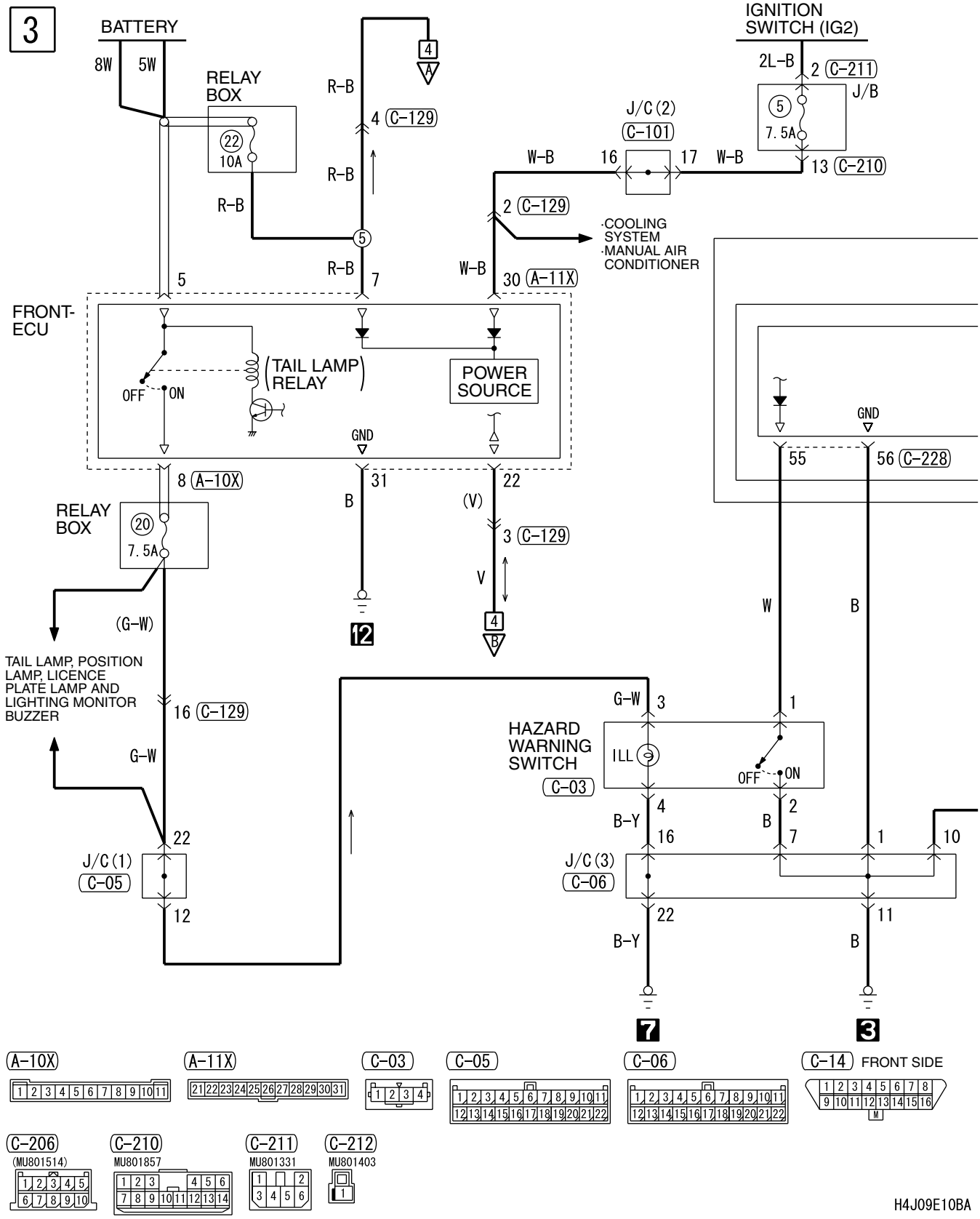

H4J09E10BA

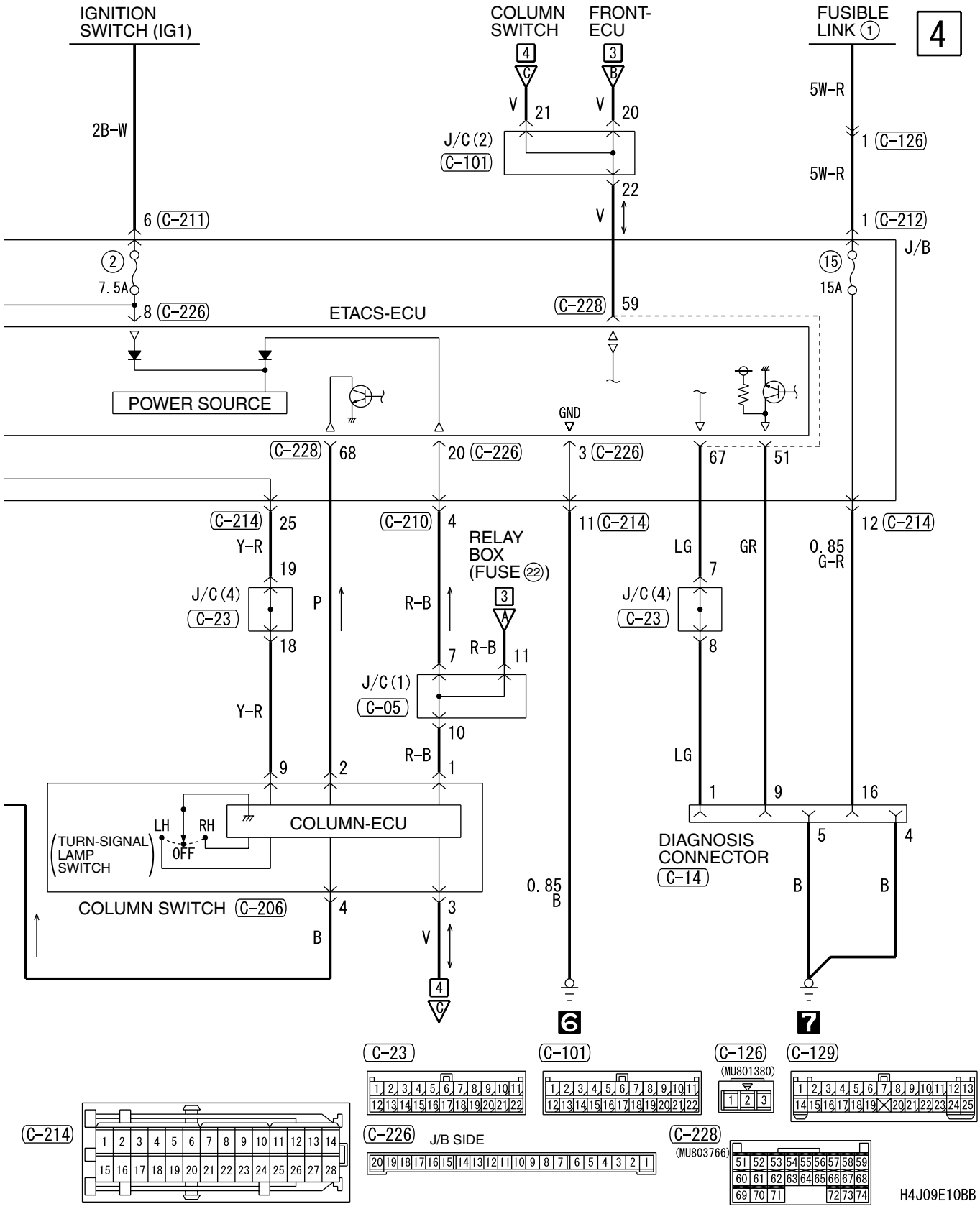
IGNITION SWITCH (IG1)
COLUMN SWITCH
FRONT-ECU
FUSIBLE LINK ①
4
2B-W
6 C-211
2
7.5A
8 C-226
J/C (2)
C-101
V 21
V 20
22
V
5W-R
1 C-126
5W-R
1 C-212
J/B
15
15A
C-228 59
ETACS-ECU
POWER SOURCE
GND
C-228 68
20 C-226
3 C-226
67
51
C-214 25
Y-R
19
J/C (4)
C-23
18
Y-R
9
C-210 4
P
R-B
RELAY BOX (FUSE 22)
3
A
R-B 11
7
J/C (1)
C-05
10
R-B
1
2
11 C-214
0.85 B
LG
GR
0.85 G-R
7
J/C (4)
C-23
8
LG
1
9
16
12 C-214
DIAGNOSIS CONNECTOR
C-14
5
4
B
B
LH
RH
OFF
TURN-SIGNAL LAMP SWITCH
COLUMN-ECU
COLUMN SWITCH C-206
4
3
B
V
4
6
7
C-23
C-101
C-126
(MU801380)
C-129
C-214
C-226
J/B SIDE
C-228
(MU803766)
H4J09E10BB

TURN SIGNAL LAMP AND HAZARD WARNING LAMP <RH drive vehicles>

M3030002900527

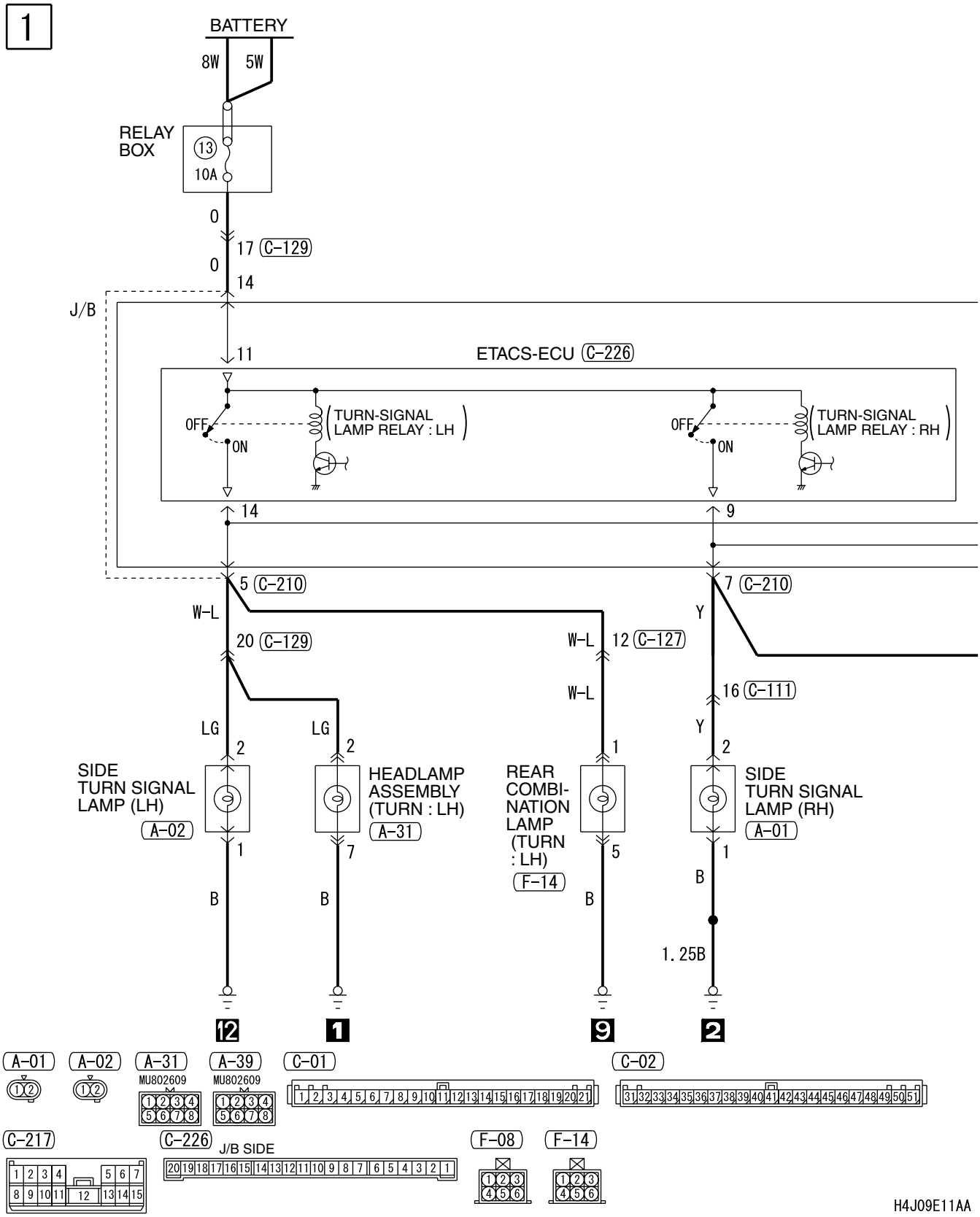

H4J09E11AA

2

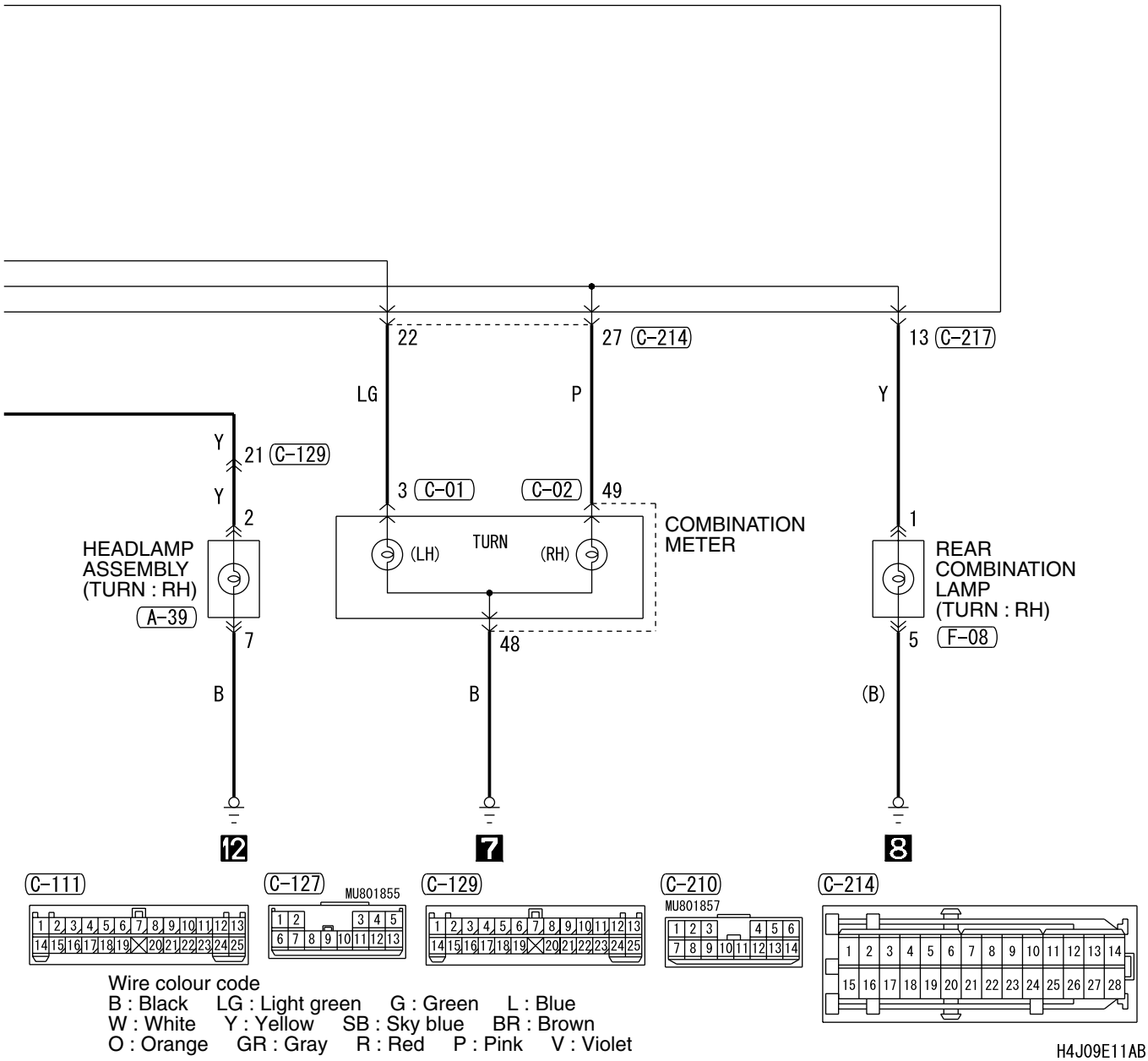
22
27 C-214
13 C-217
LG
P
Y
Y
21 C-129
Y
2
3 C-01
C-02
49
1
HEADLAMP ASSEMBLY (TURN : RH)
A-39
(LH)
TURN
(RH)
COMBINATION METER
REAR COMBINATION LAMP (TURN : RH)
F-08
7
48
5
B
B
(B)
12
7
8
C-111
C-127
MU801855
C-129
C-210
MU801857
C-214
Wire colour code
B : Black LG : Light green G : Green L : Blue
W : White Y : Yellow SB : Sky blue BR : Brown
O : Orange GR : Gray R : Red P : Pink V : Violet
H4J09E11AB

TURN SIGNAL LAMP AND HAZARD WARNING LAMP <RH drive vehicles> (CONTINUED)

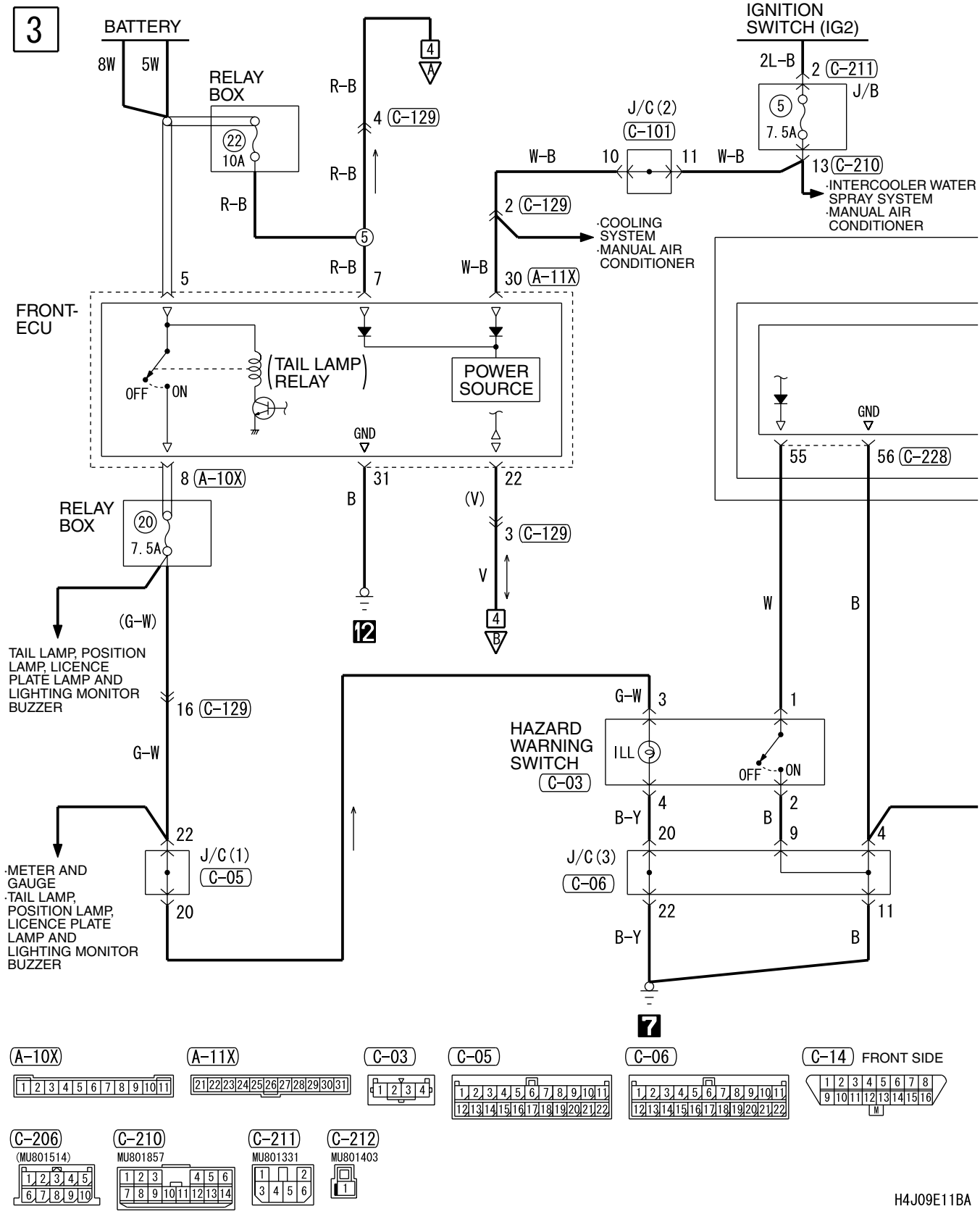

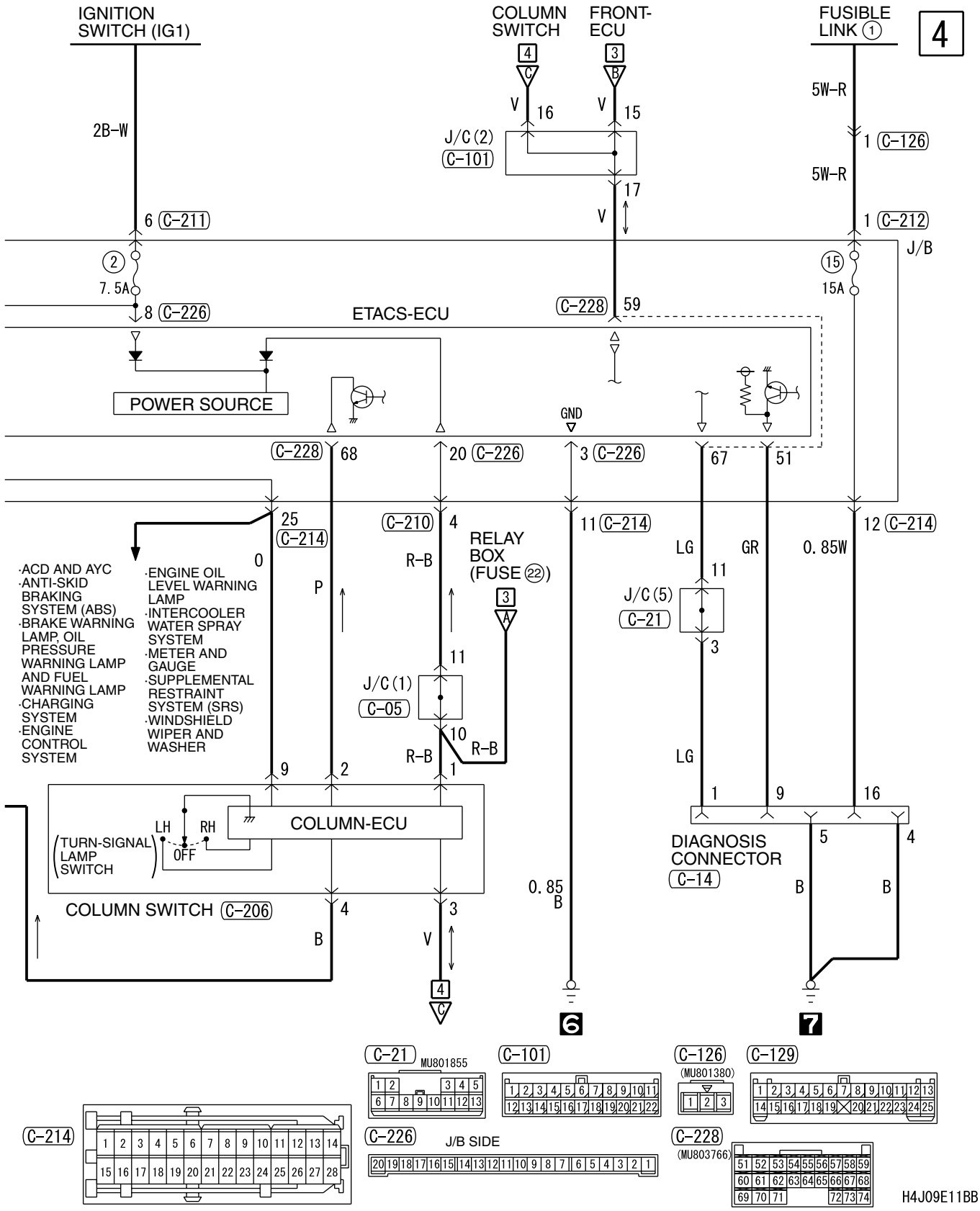
IGNITION SWITCH (IG1)
COLUMN SWITCH
FRONT-ECU
FUSIBLE LINK ①
4
2B-W
5W-R
J/C (2) C-101
6 C-211
1 C-126
1 C-212
J/B
7.5A
15A
8 C-226
ETACS-ECU
C-228 59
POWER SOURCE
GND
C-228 68
20 C-226
3 C-226
67
51
25 C-214
C-210 4
11 C-214
12 C-214
RELAY BOX (FUSE 22)
LG
GR
0.85W
J/C (5) C-21
J/C (1) C-05
·ACD AND AYC
·ANTI-SKID BRAKING SYSTEM (ABS)
·BRAKE WARNING LAMP, OIL PRESSURE WARNING LAMP AND FUEL WARNING LAMP
·CHARGING SYSTEM
·ENGINE CONTROL SYSTEM
·ENGINE OIL LEVEL WARNING LAMP
·INTERCOOLER WATER SPRAY SYSTEM
·METER AND GAUGE
·SUPPLEMENTAL RESTRAINT SYSTEM (SRS)
·WINDSHIELD WIPER AND WASHER
COLUMN-ECU
LH
RH
OFF
TURN-SIGNAL LAMP SWITCH
COLUMN SWITCH C-206
0.85 B
DIAGNOSIS CONNECTOR C-14
6
7
C-21
MU801855
C-101
C-126
(MU801380)
C-129
C-214
C-226
J/B SIDE
C-228
(MU803766)
H4J09E11BB

BACK-UP LAMP

BACK-UP LAMP <LH drive vehicles>

M3030011700060

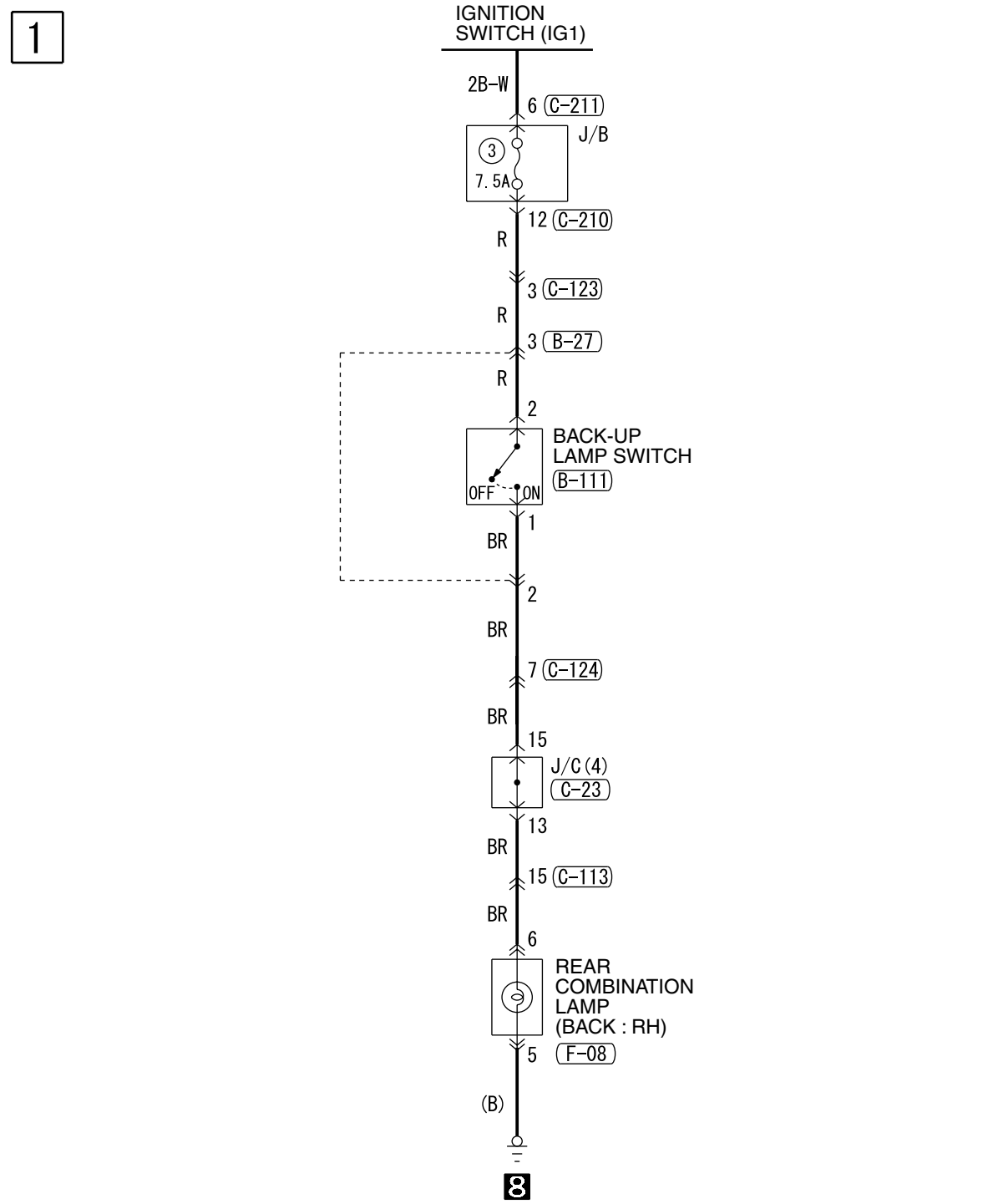

H4J09E12AA

BACK-UP LAMP <RH drive vehicles>

M3030011700071

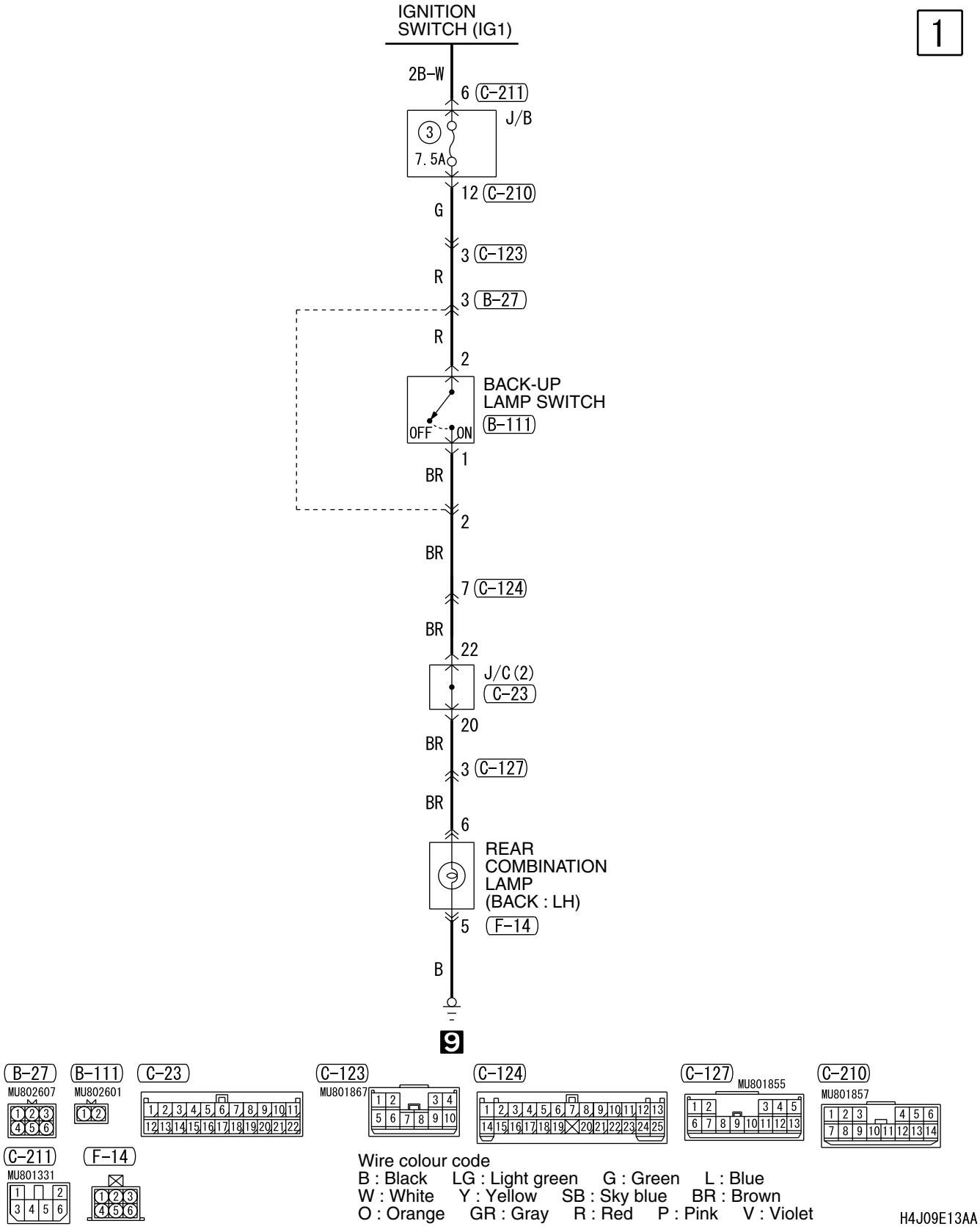

STOP LAMP

STOP LAMP <LH drive vehicles>

M3030003000516

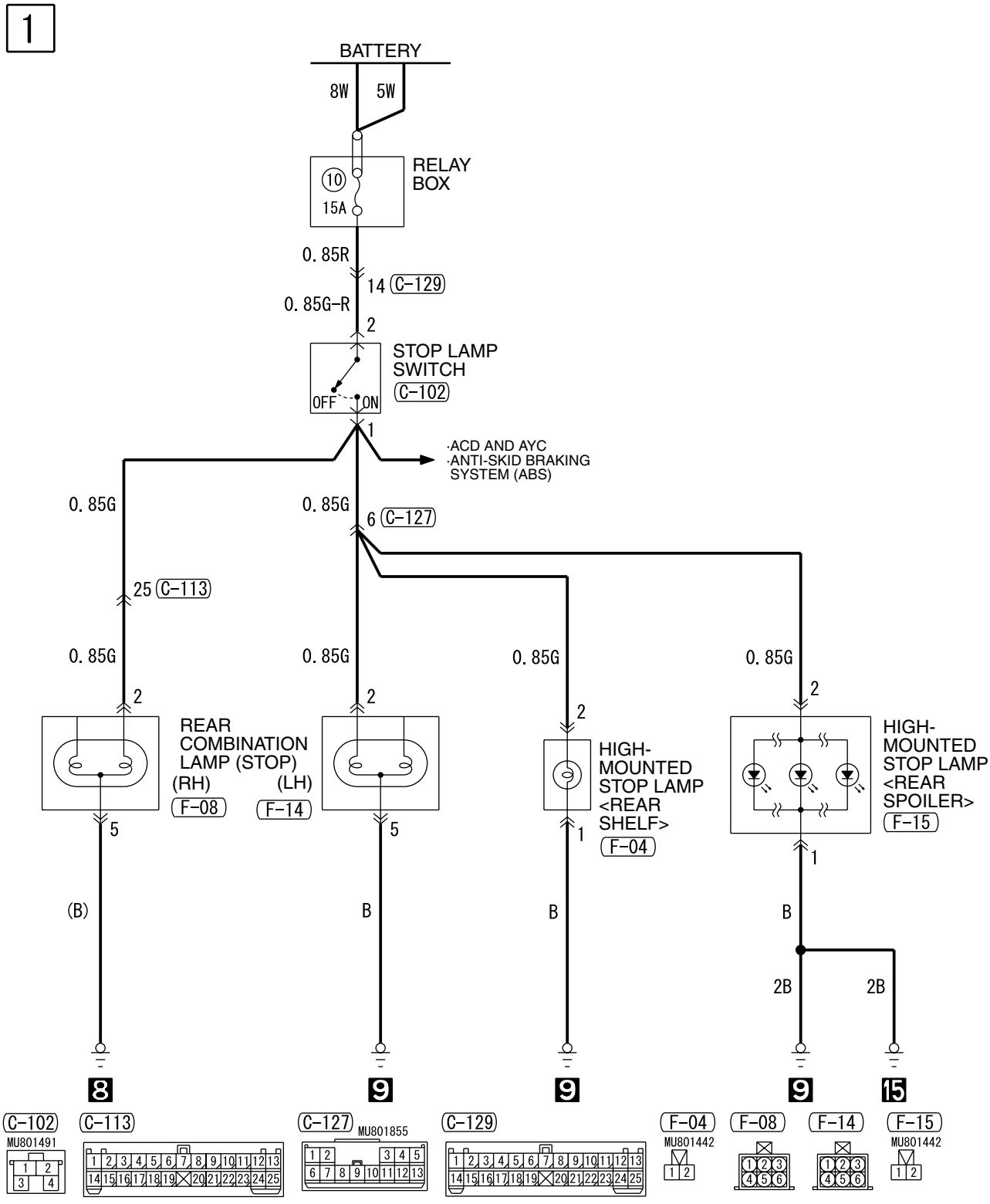

Wire colour code
B : Black LG : Light green G : Green L : Blue W : White Y : Yellow SB : Sky blue
BR : Brown O : Orange GR : Gray R : Red P : Pink V : Violet

H4J09E14AA

STOP LAMP <RH drive vehicles>

M3030003000527

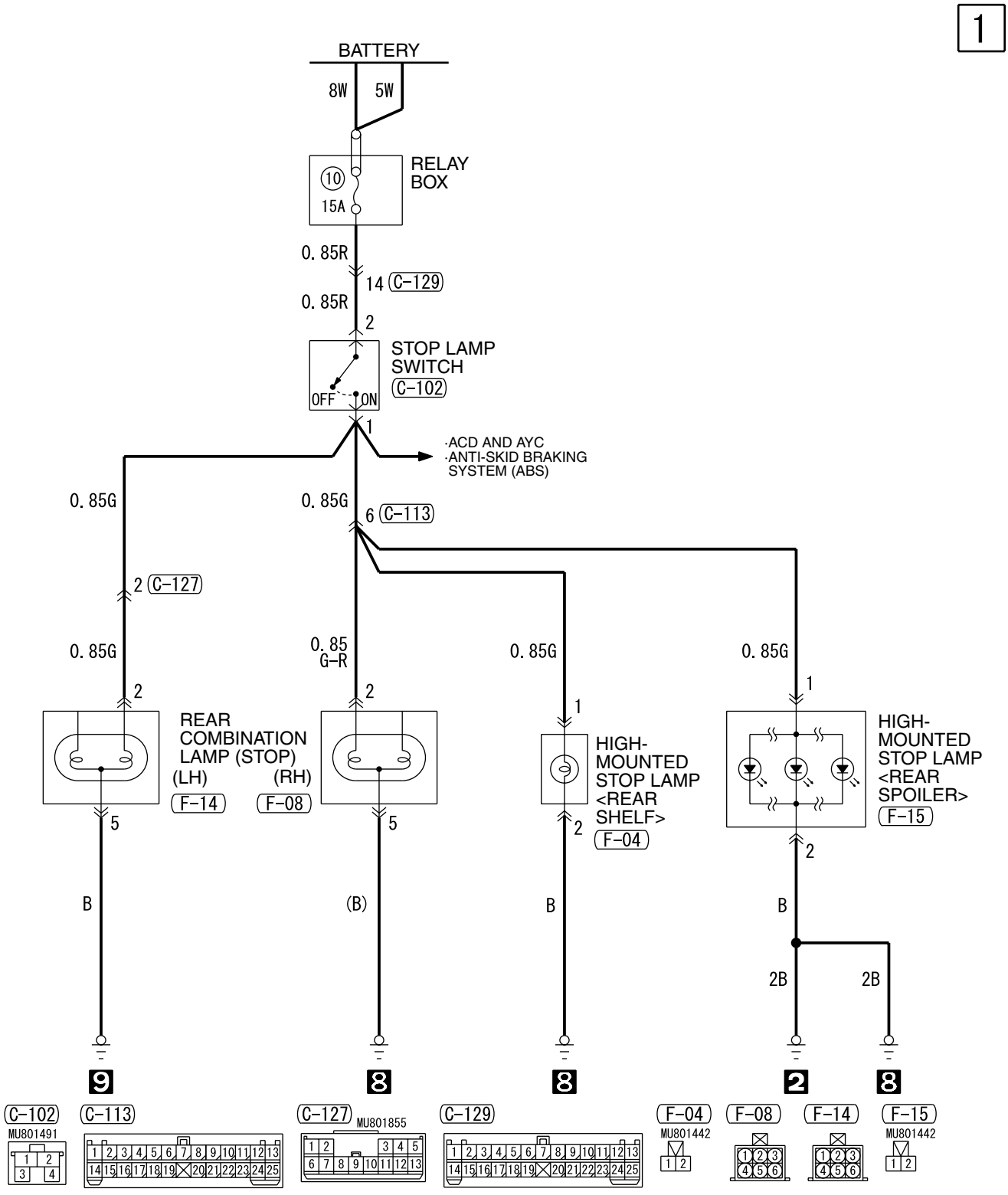

Wire colour code
B : Black LG : Light green G : Green L : Blue W : White Y : Yellow SB : Sky blue
BR : Brown O : Orange GR : Gray R : Red P : Pink V : Violet

H4J09E15AA

HORN

HORN <LH drive vehicles>

M3030003300421

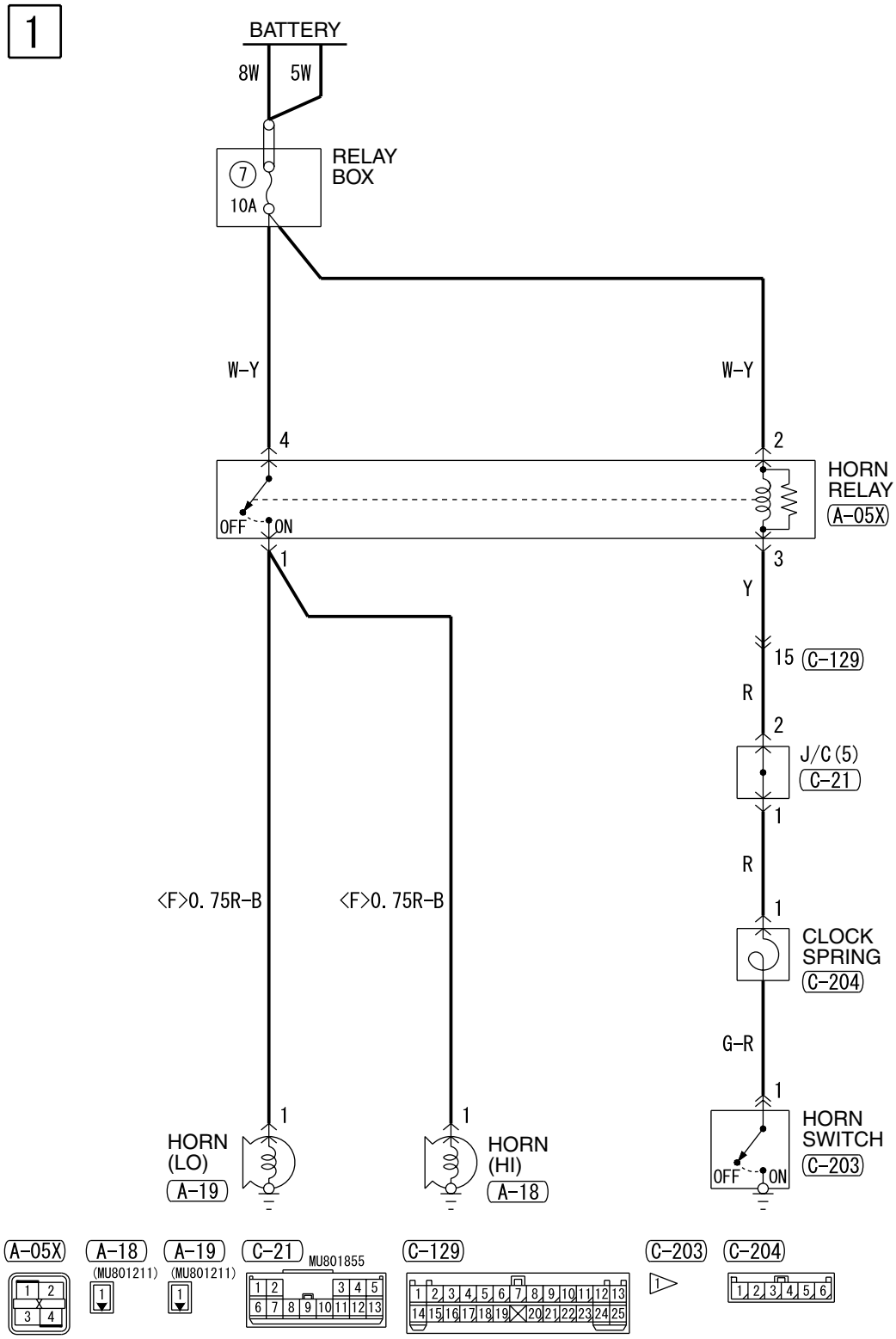

Wire colour code
B : Black LG : Light green G : Green L : Blue W : White Y : Yellow SB : Sky blue
BR : Brown O : Orange GR : Gray R : Red P : Pink V : Violet

H4J09E16AA

HORN <RH drive vehicles>

M3030003300432

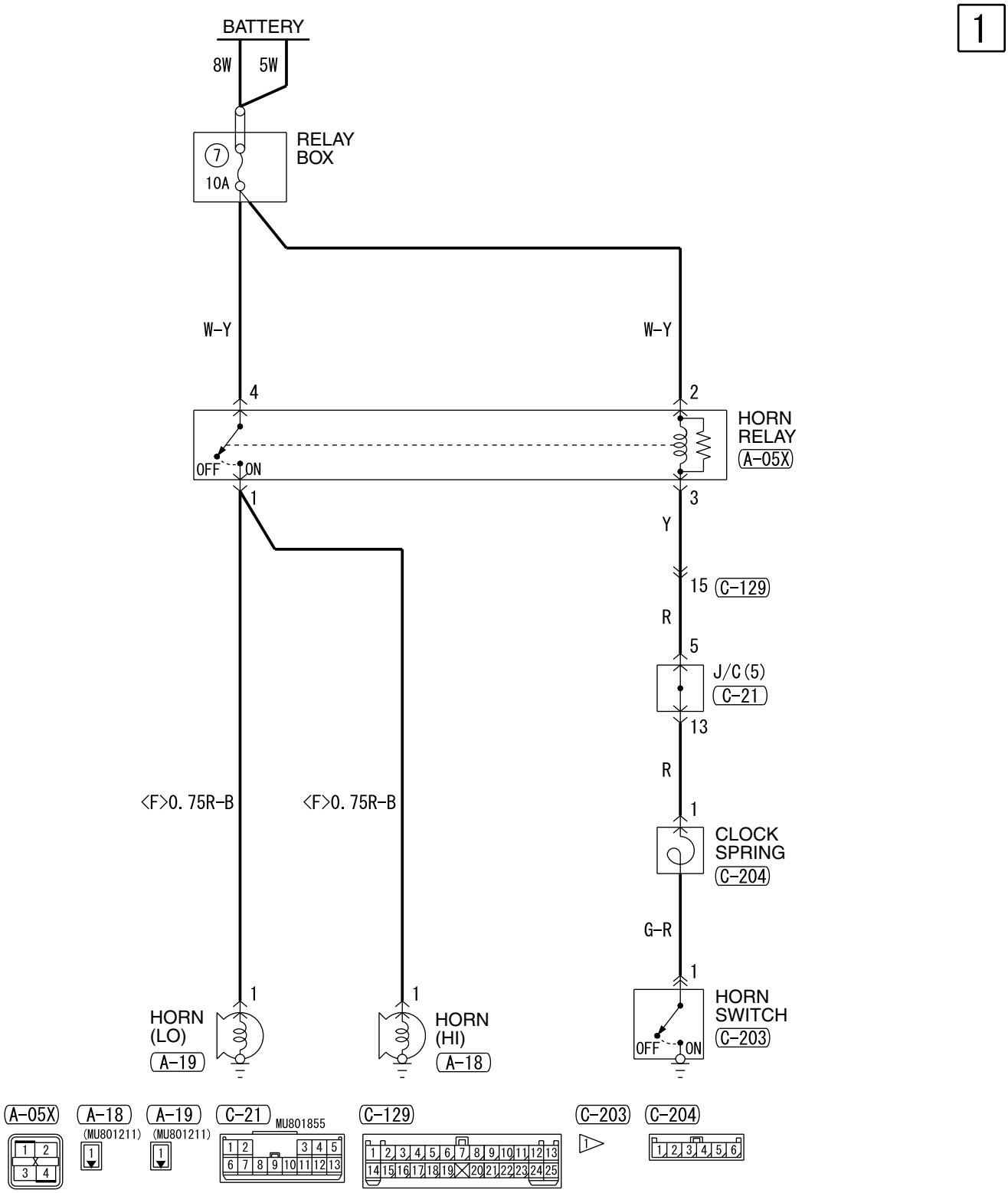

Wire colour code
B : Black LG : Light green G : Green L : Blue W : White Y : Yellow SB : Sky blue
BR : Brown O : Orange GR : Gray R : Red P : Pink V : Violet

H4J09E17AA

METER AND GAUGE

METER AND GAUGE <LH drive vehicles>

M30300035007 82

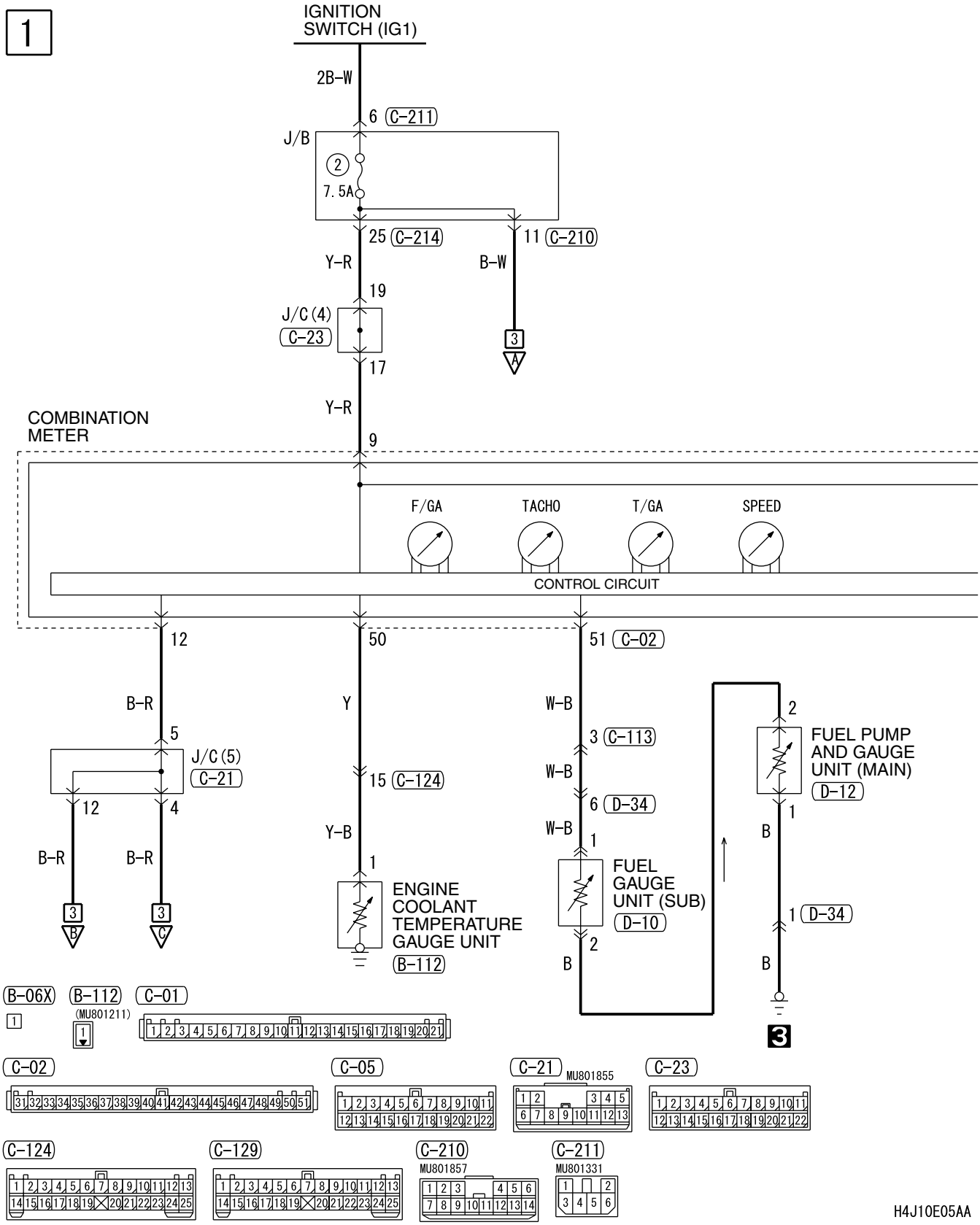

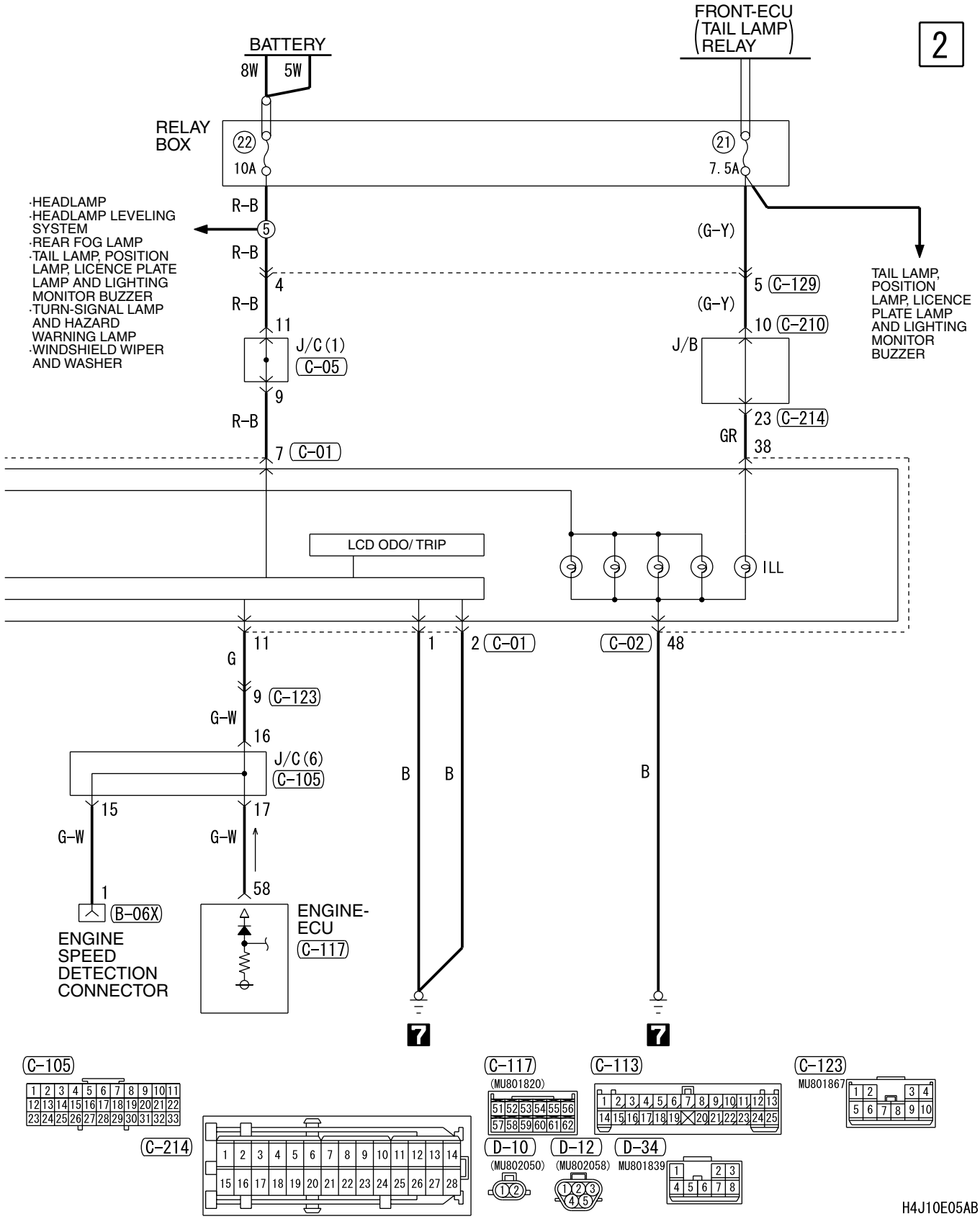
BATTERY
8W
5W
FRONT-ECU
(TAIL LAMP RELAY)
2
RELAY BOX
22
10A
21
7.5A
·HEADLAMP
·HEADLAMP LEVELING SYSTEM
·REAR FOG LAMP
·TAIL LAMP, POSITION LAMP, LICENCE PLATE LAMP AND LIGHTING MONITOR BUZZER
·TURN-SIGNAL LAMP AND HAZARD WARNING LAMP
·WINDSHIELD WIPER AND WASHER
R-B
5
4
11
J/C (1)
C-05
9
7
C-01
(G-Y)
5
C-129
10
C-210
J/B
23
C-214
GR
38
TAIL LAMP, POSITION LAMP, LICENCE PLATE LAMP AND LIGHTING MONITOR BUZZER
LCD ODO/ TRIP
ILL
11
G
9
C-123
G-W
16
J/C (6)
C-105
15
17
1
B-06X
58
ENGINE SPEED DETECTION CONNECTOR
ENGINE-ECU
C-117
1
2
C-01
B
C-02
48
7
C-105
C-214
C-117
(MU801820)
C-113
C-123
MU801867
D-10
(MU802050)
D-12
(MU802058)
D-34
MU801839
H4J10E05AB

METER AND GAUGE <LH drive vehicles> (CONTINUED)

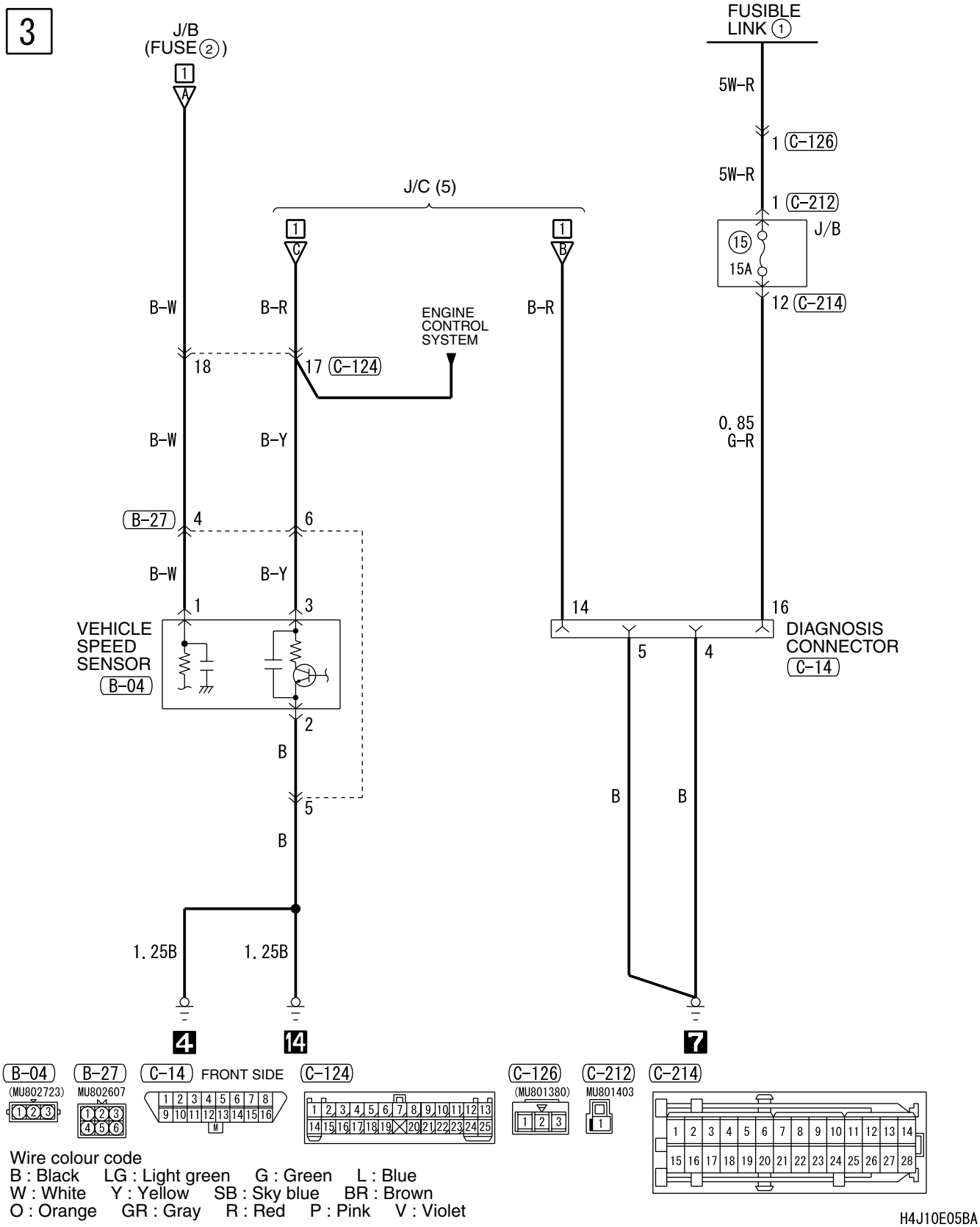

Wire colour code
B : Black LG : Light green G : Green L : Blue
W : White Y : Yellow SB : Sky blue BR : Brown
O : Orange GR : Gray R : Red P : Pink V : Violet

H4J10E05BA

NOTES

METER AND GAUGE <RH drive vehicles>

M3030003500793

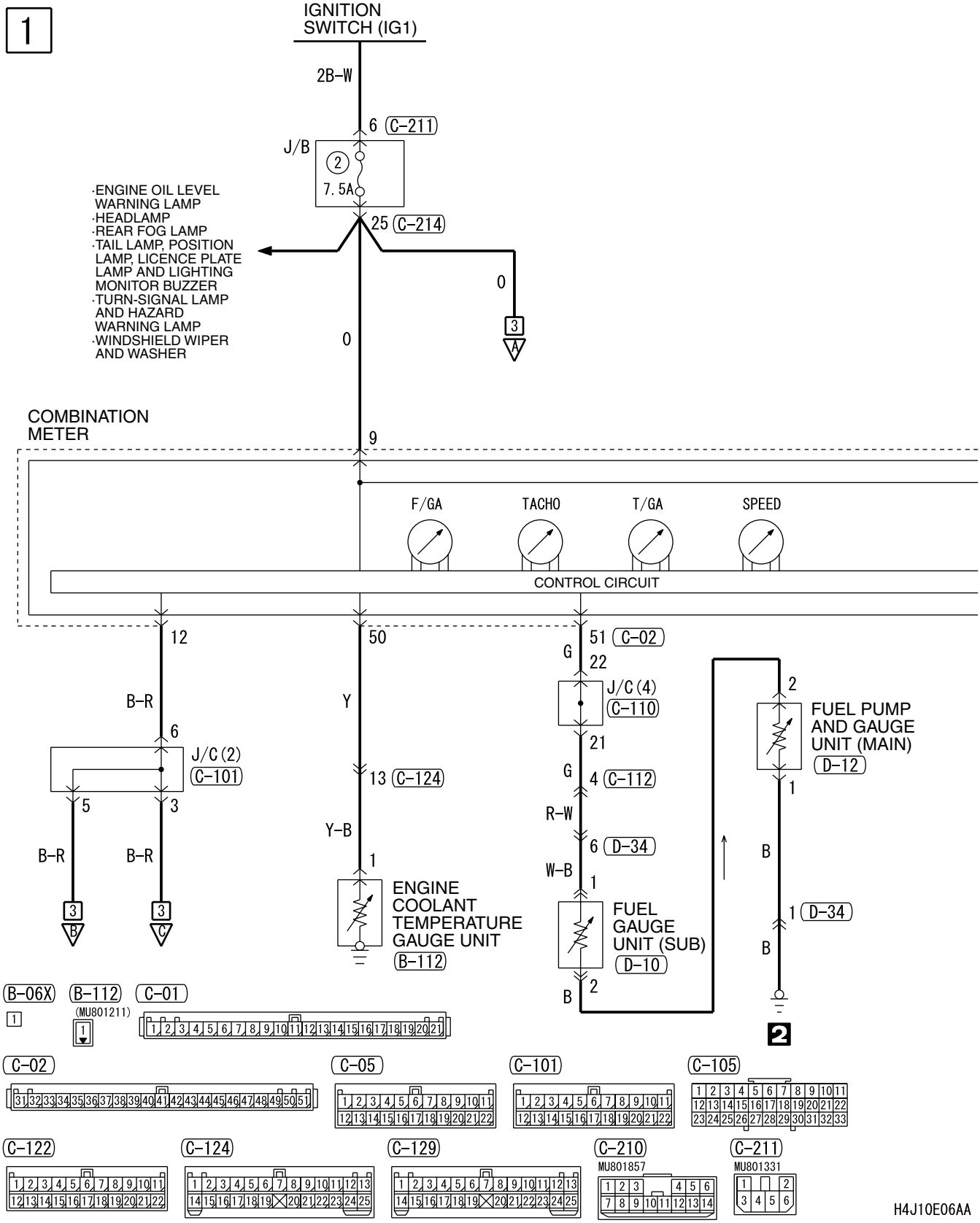

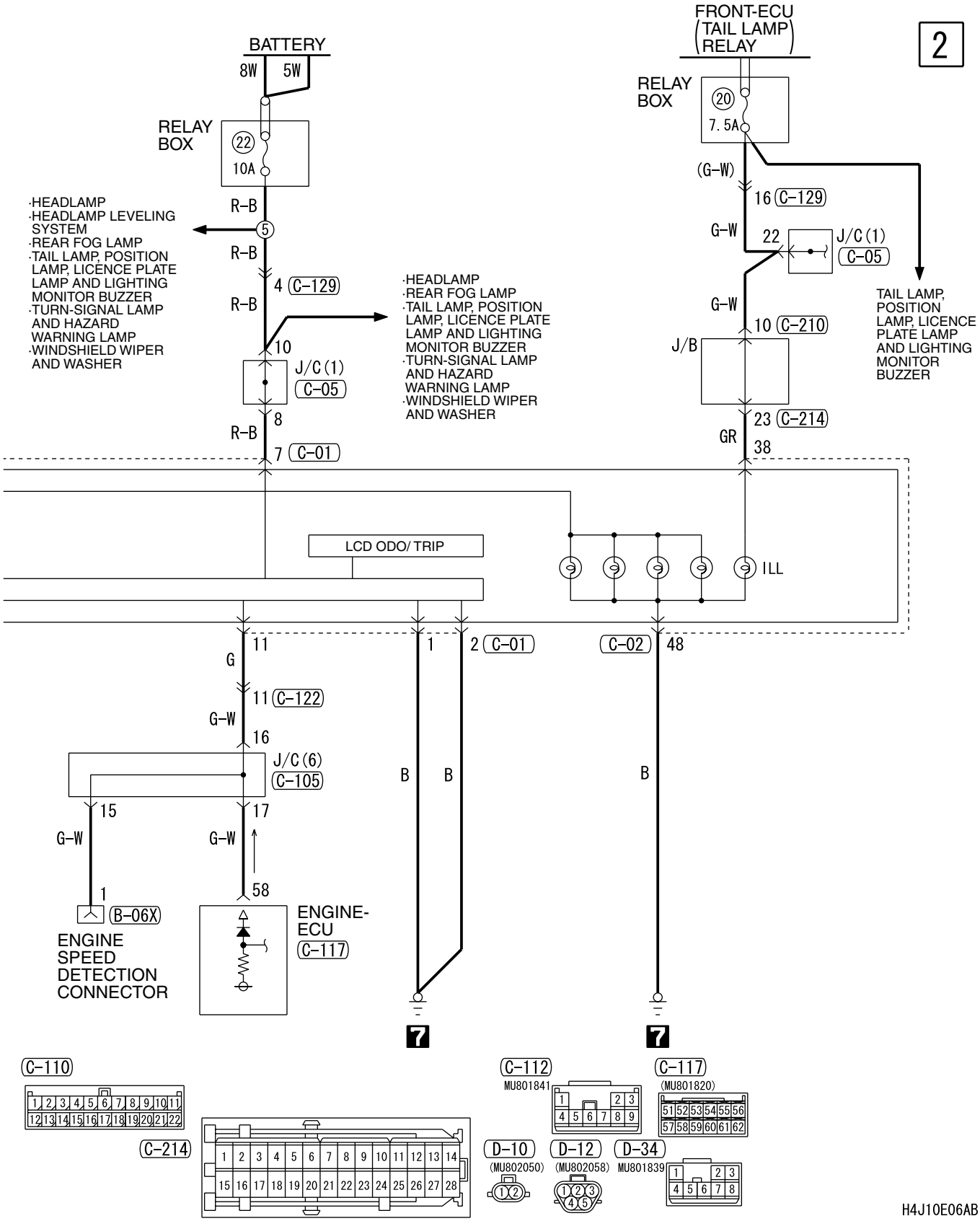
BATTERY
8W
5W
RELAY BOX
22
10A
R-B
5
·HEADLAMP
·HEADLAMP LEVELING SYSTEM
·REAR FOG LAMP
·TAIL LAMP, POSITION LAMP, LICENCE PLATE LAMP AND LIGHTING MONITOR BUZZER
·TURN-SIGNAL LAMP AND HAZARD WARNING LAMP
·WINDSHIELD WIPER AND WASHER
4 C-129
10
J/C (1) C-05
8
7 C-01
·HEADLAMP
·REAR FOG LAMP
·TAIL LAMP, POSITION LAMP, LICENCE PLATE LAMP AND LIGHTING MONITOR BUZZER
·TURN-SIGNAL LAMP AND HAZARD WARNING LAMP
·WINDSHIELD WIPER AND WASHER
FRONT-ECU (TAIL LAMP RELAY)
2
RELAY BOX
20
7.5A
(G-W)
16 C-129
G-W
22
J/C (1) C-05
G-W
10 C-210
J/B
23 C-214
GR
38
TAIL LAMP, POSITION LAMP, LICENCE PLATE LAMP AND LIGHTING MONITOR BUZZER
LCD ODO/ TRIP
ILL
11
G
11 C-122
G-W
16
J/C (6) C-105
15
G-W
1
B-06X
ENGINE SPEED DETECTION CONNECTOR
17
G-W
58
ENGINE-ECU C-117
1
2 C-01
B
B
C-02
48
B
7
7
C-110
C-214
C-112
MU801841
C-117
(MU801820)
D-10
(MU802050)
D-12
(MU802058)
D-34
MU801839

H4J10E06AB

METER AND GAUGE <RH drive vehicles> (CONTINUED)

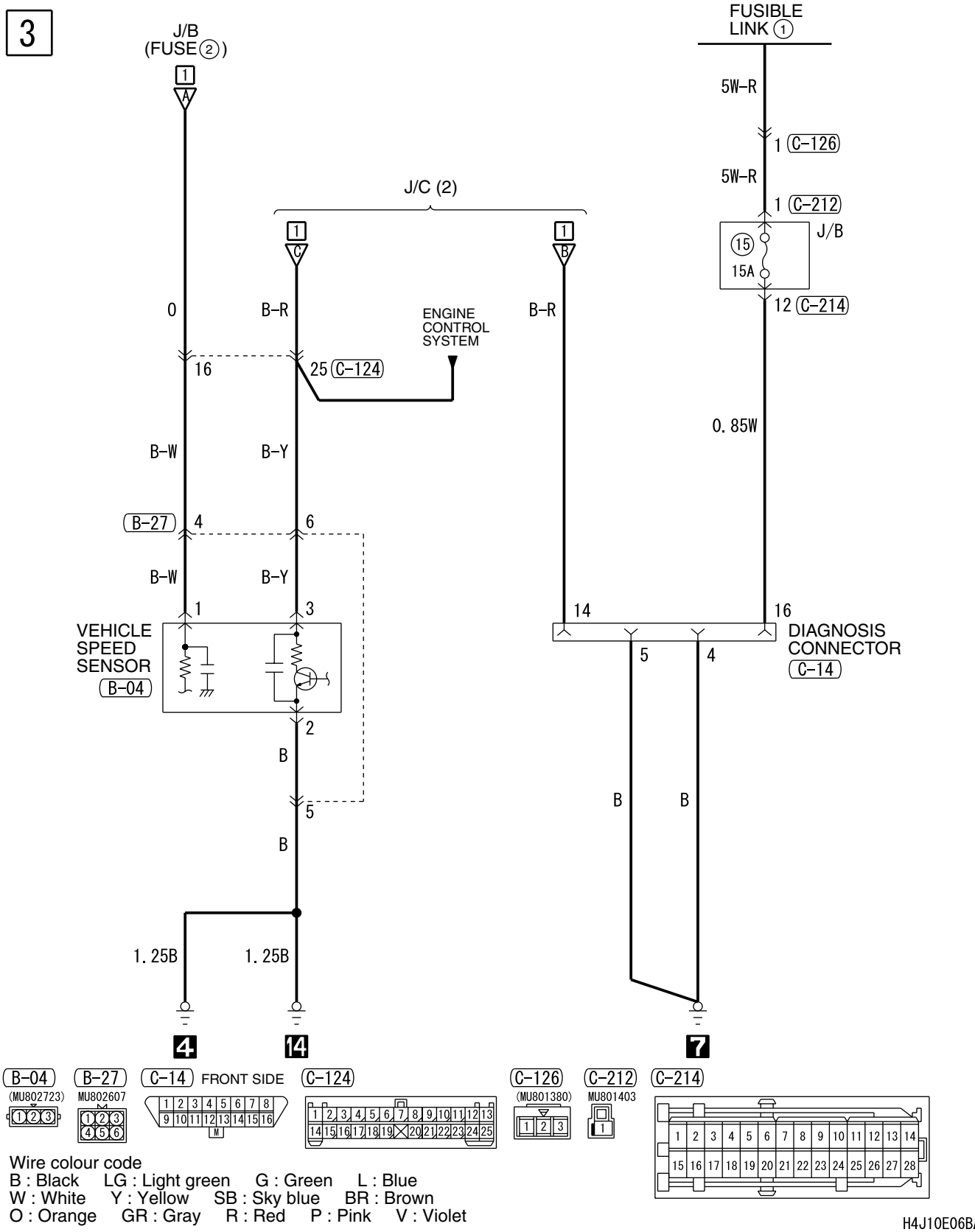

NOTES

WARNING LAMP

BRAKE WARNING LAMP, OIL PRESSURE WARNING LAMP AND FUEL WARNING LAMP <LH drive vehicles>

M3030011800454

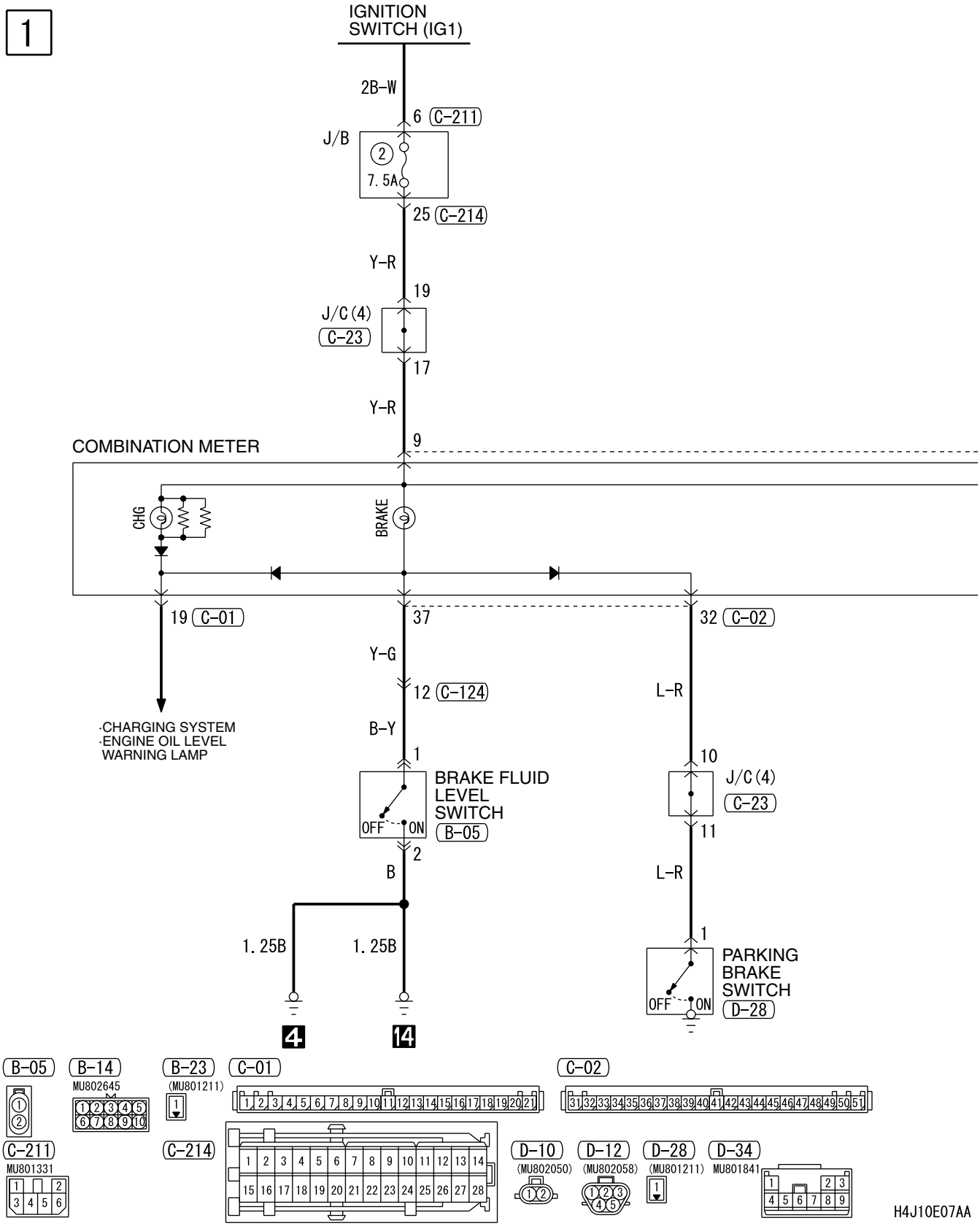

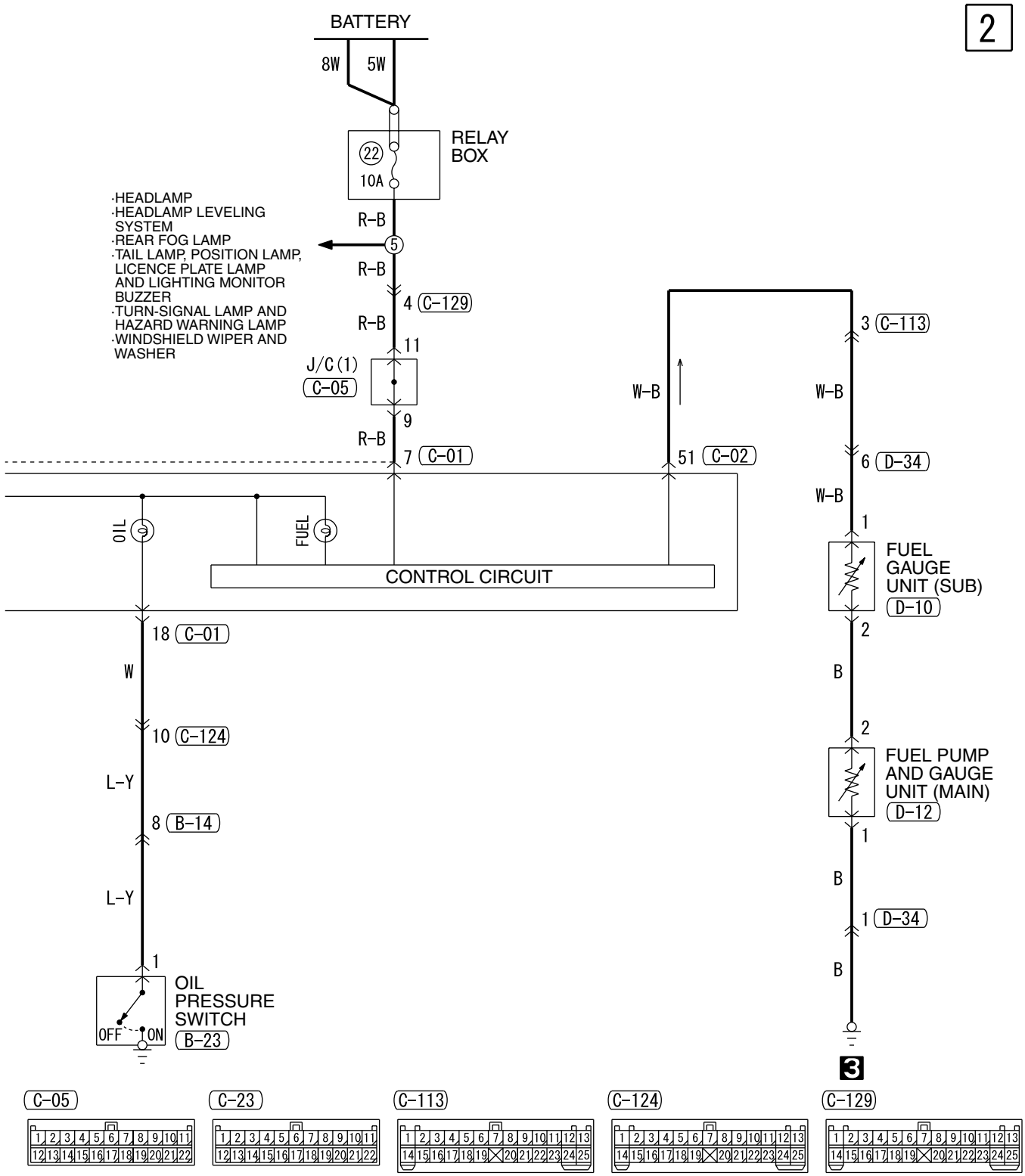

Wire colour code
B : Black LG : Light green G : Green L : Blue W : White Y : Yellow SB : Sky blue
BR : Brown O : Orange GR : Gray R : Red P : Pink V : Violet

H4J10E07AB

BRAKE WARNING LAMP, OIL PRESSURE WARNING LAMP AND FUEL WARNING LAMP <RH drive vehicles>

M3030011800465

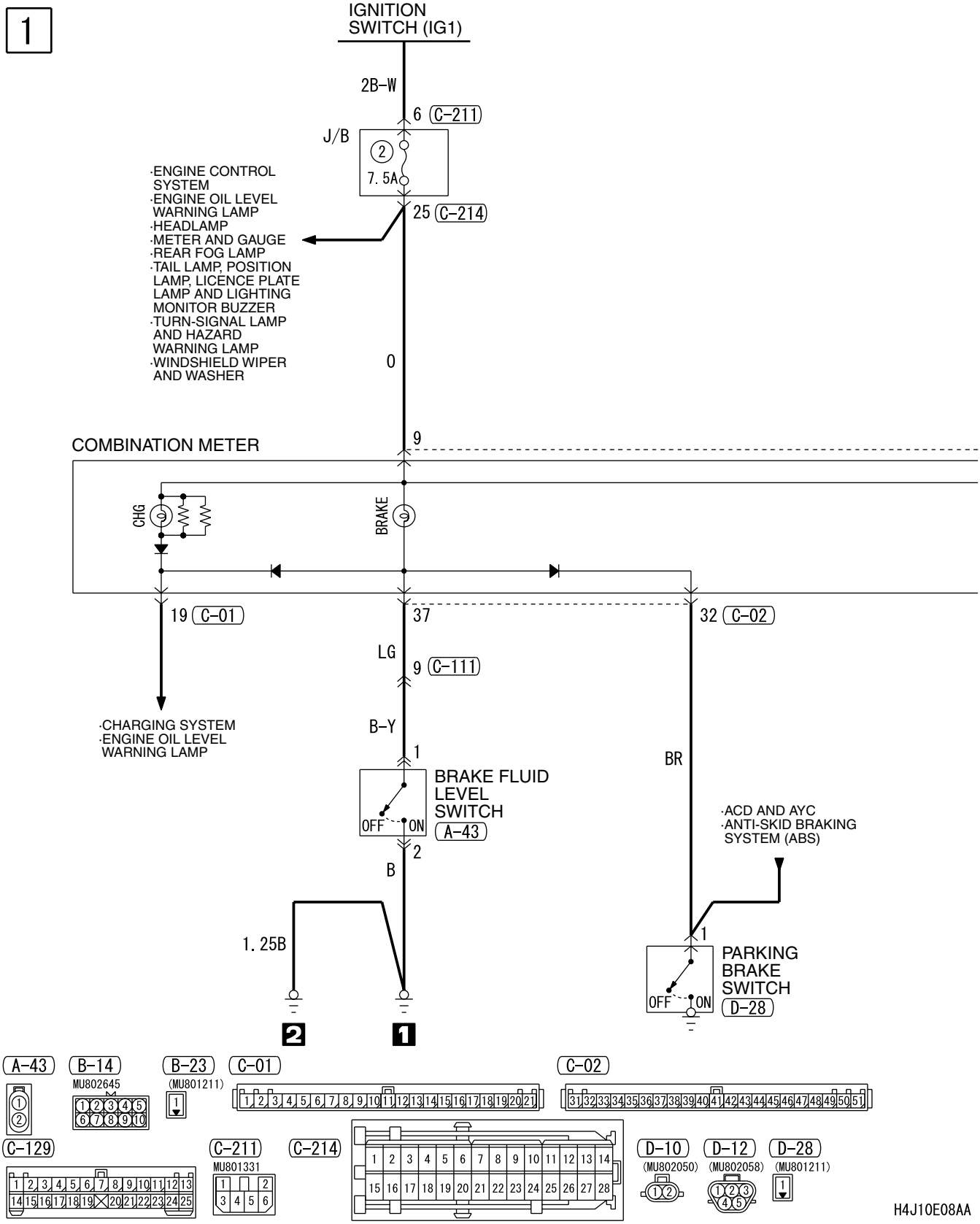

H4J10E08AA

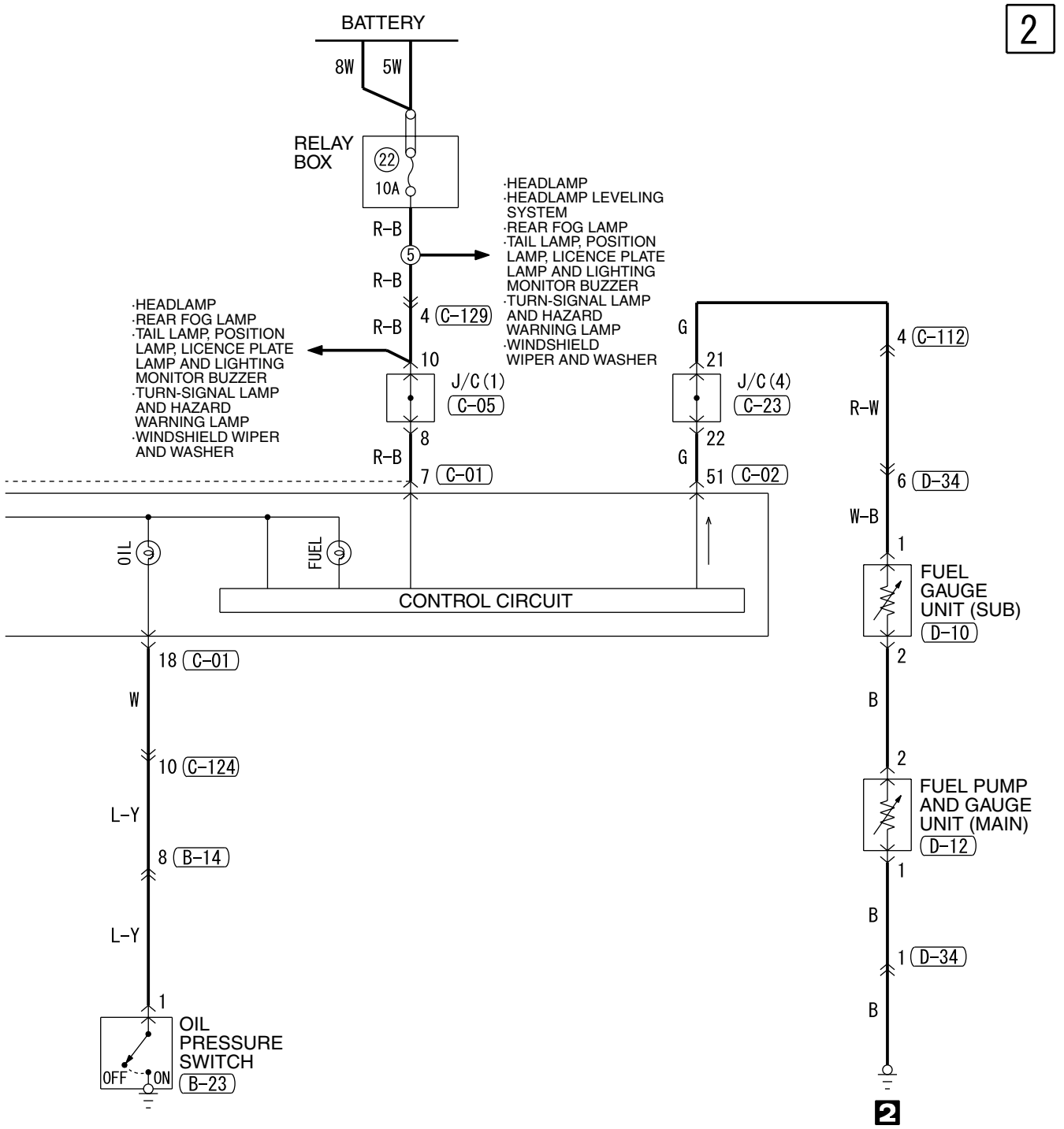

Wire colour code
B : Black LG : Light green G : Green L : Blue W : White Y : Yellow SB : Sky blue
BR : Brown O : Orange GR : Gray R : Red P : Pink V : Violet

H4J10E08AB

ENGINE OIL LEVEL WARNING LAMP

ENGINE OIL LEVEL WARNING LAMP <LH drive vehicles>

M3030026500017

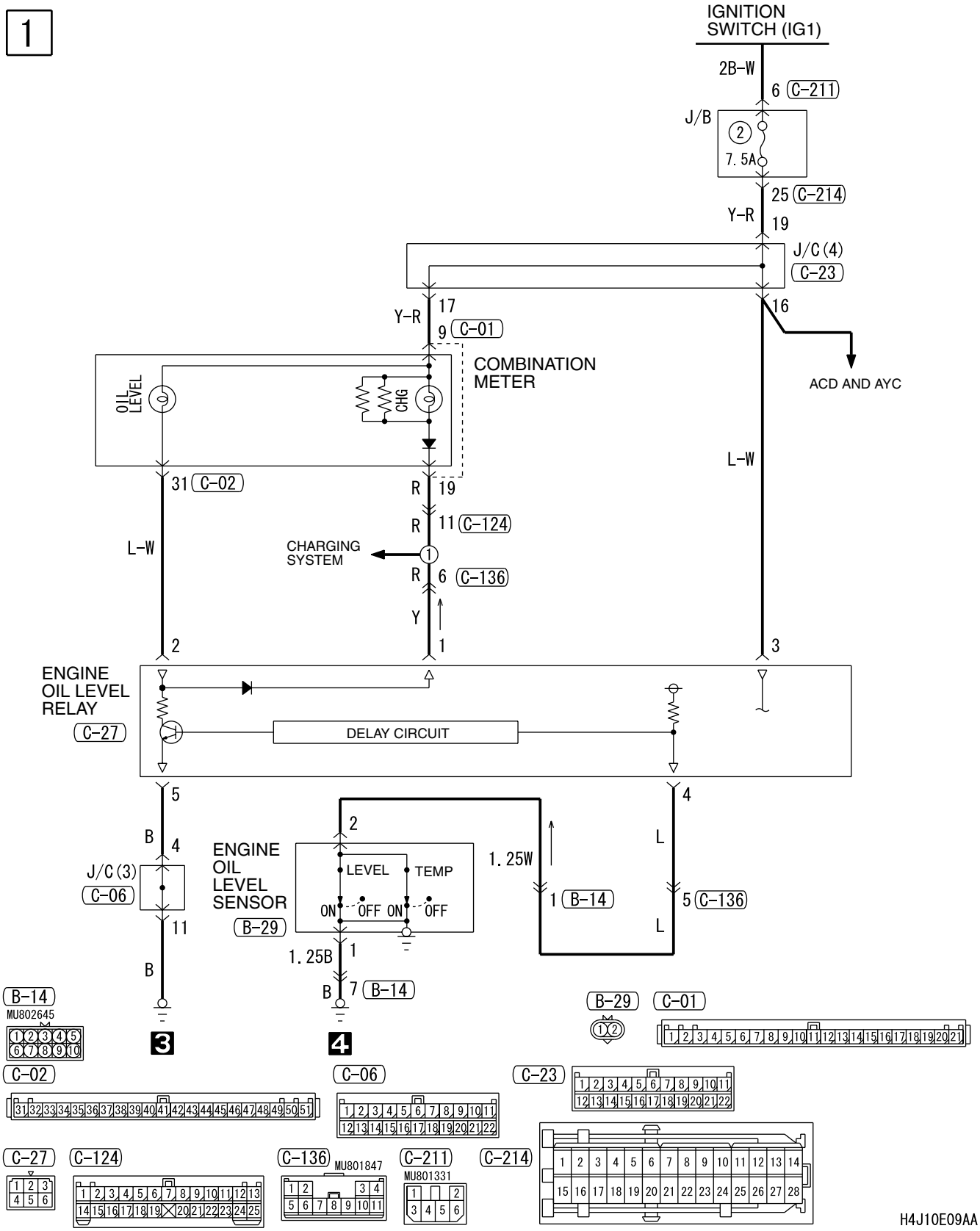

ENGINE OIL LEVEL WARNING LAMP <RH drive vehicles>

M3030026500028

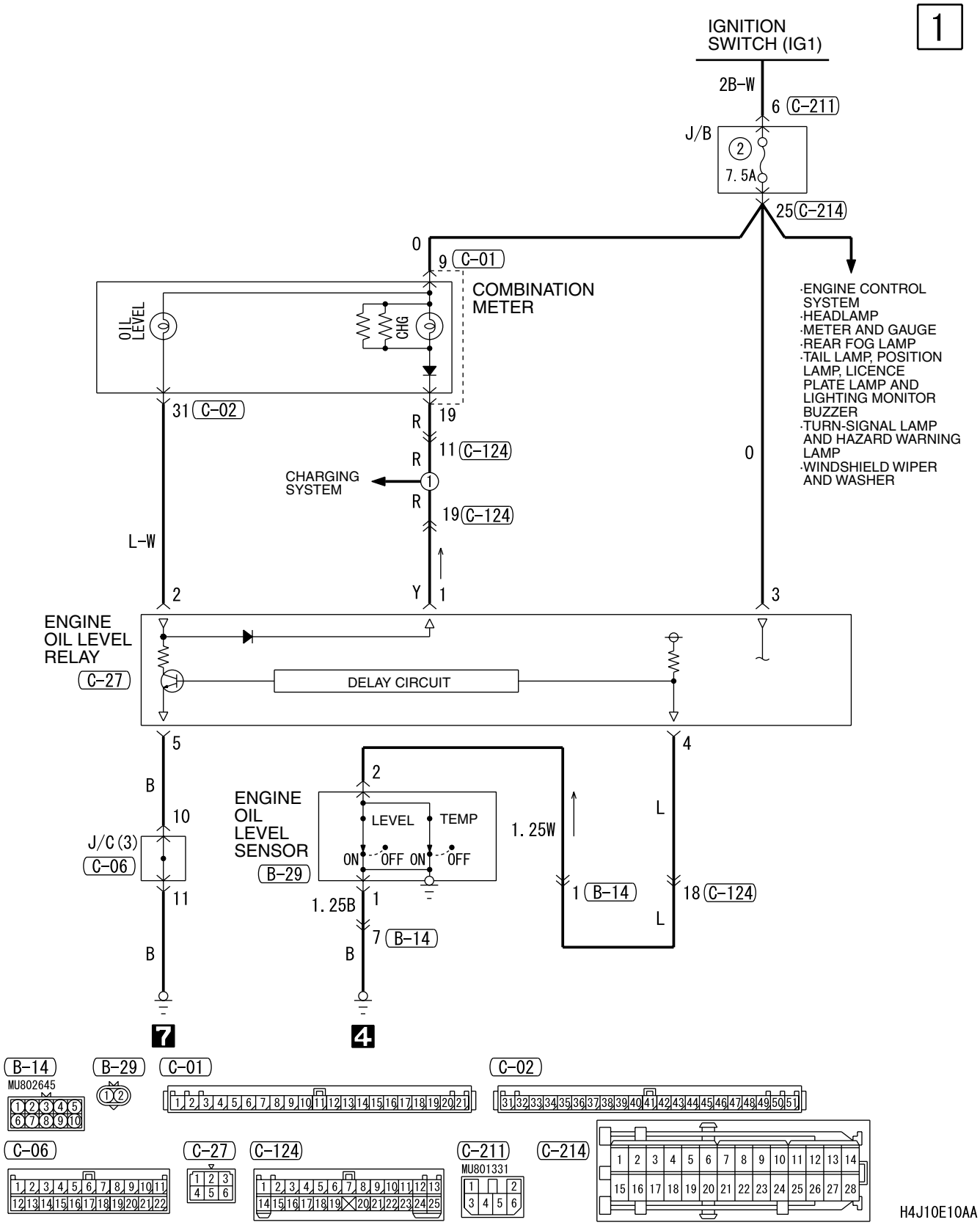

POWER WINDOWS

POWER WINDOWS <LH drive vehicles>

M3030004600500

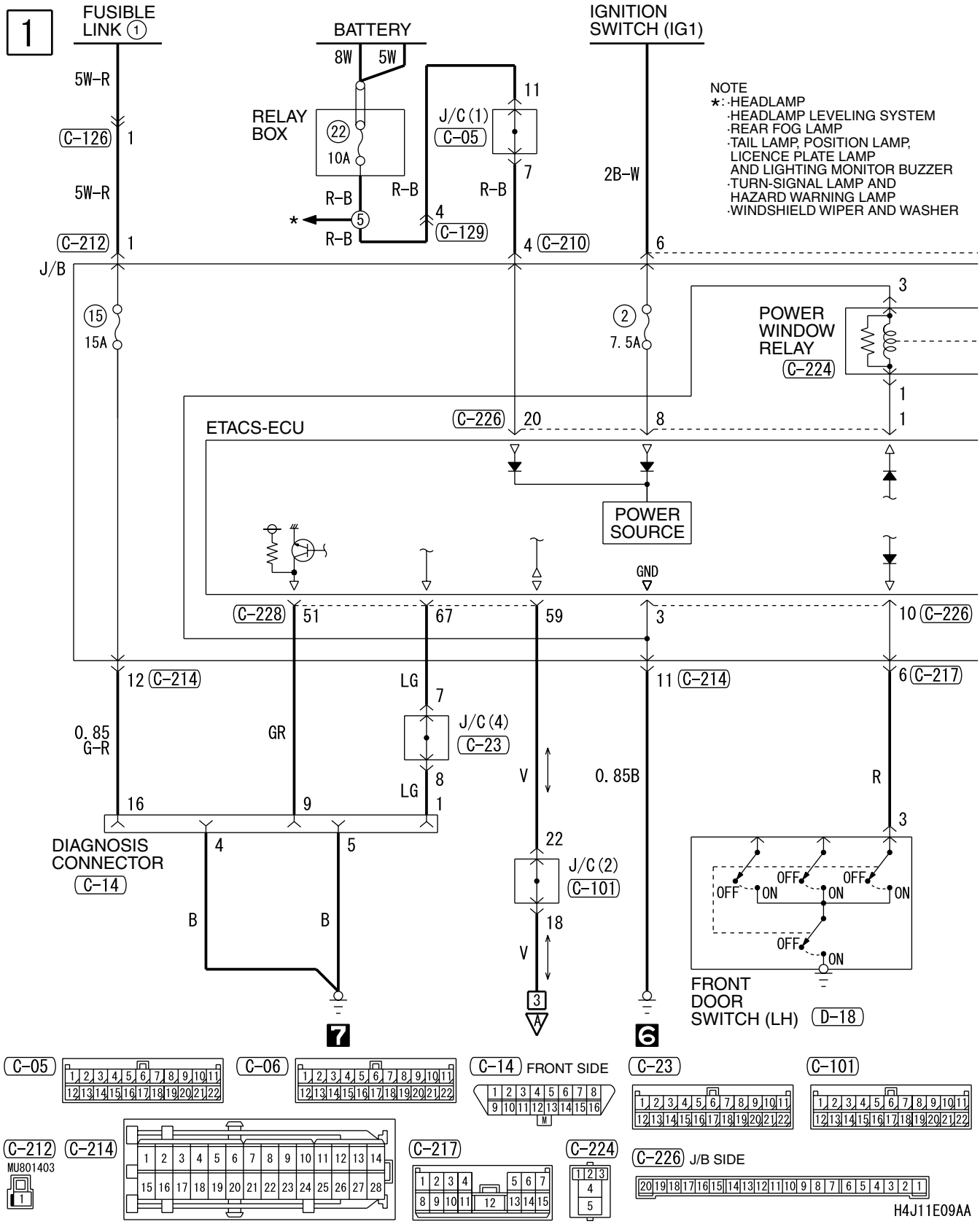

NOTE
★: ·HEADLAMP
·HEADLAMP LEVELING SYSTEM
·REAR FOG LAMP
·TAIL LAMP, POSITION LAMP, LICENCE PLATE LAMP AND LIGHTING MONITOR BUZZER
·TURN-SIGNAL LAMP AND HAZARD WARNING LAMP
·WINDSHIELD WIPER AND WASHER

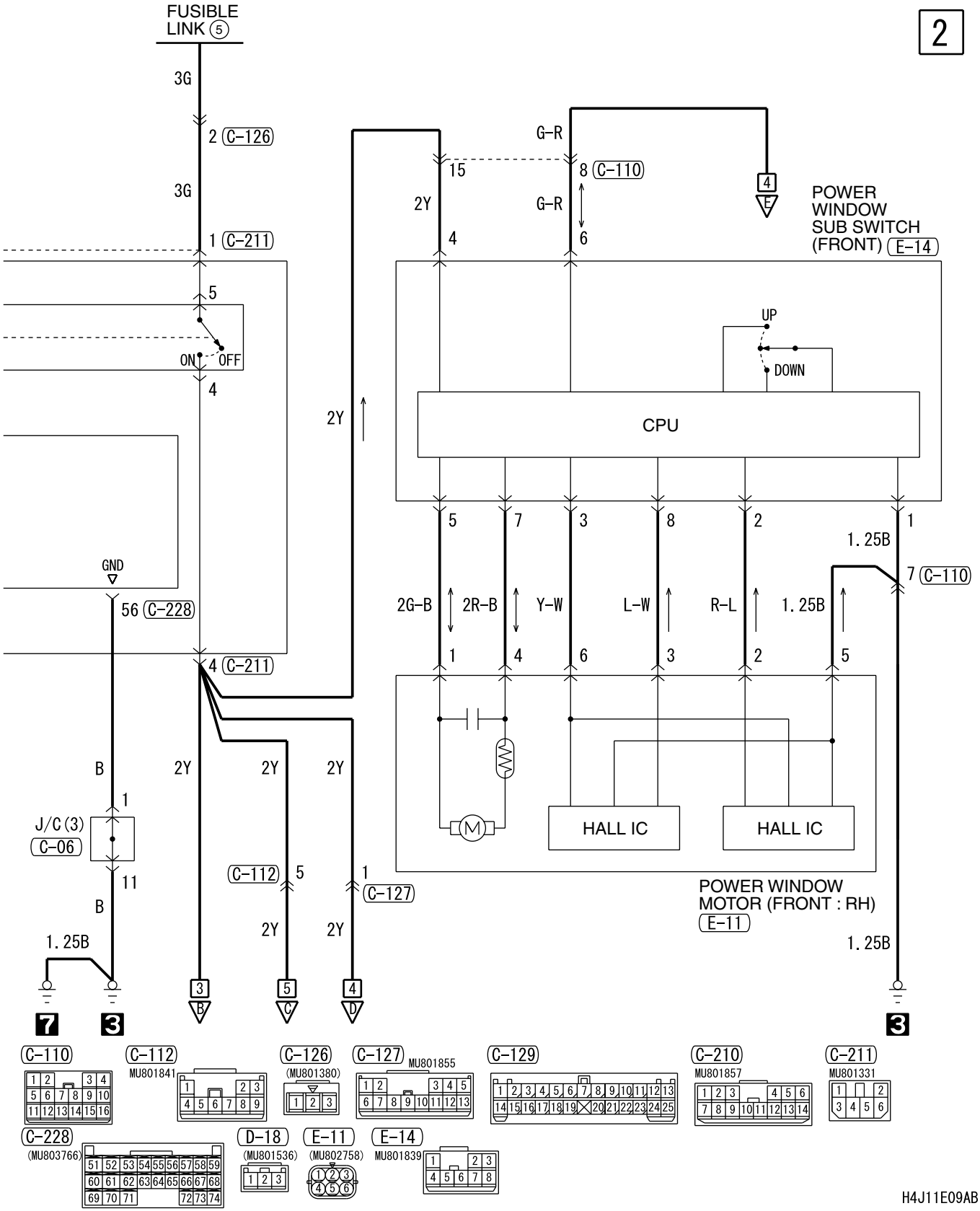
2
FUSIBLE LINK (5)
3G
2 (C-126)
3G
1 (C-211)
5
ON
OFF
4
GND
56 (C-228)
4 (C-211)
B
2Y
2Y
2Y
1
J/C (3)
(C-06)
11
B
1.25B
C-112
5
1
C-127
2Y
2Y
3
5
4
B
C
D
7
3
G-R
15
8 (C-110)
2Y
G-R
4
6
4
E
POWER WINDOW SUB SWITCH (FRONT) (E-14)
UP
DOWN
CPU
2Y
5
7
3
8
2
1
1.25B
7 (C-110)
2G-B
2R-B
Y-W
L-W
R-L
1.25B
1
4
6
3
2
5
M
HALL IC
HALL IC
POWER WINDOW MOTOR (FRONT : RH) (E-11)
1.25B
3
C-110
C-112
MU801841
C-126
(MU801380)
C-127
MU801855
C-129
C-210
MU801857
C-211
MU801331
C-228
(MU803766)
D-18
(MU801536)
E-11
(MU802758)
E-14
MU801839
H4J11E09AB

POWER WINDOWS <LH drive vehicles> (CONTINUED)

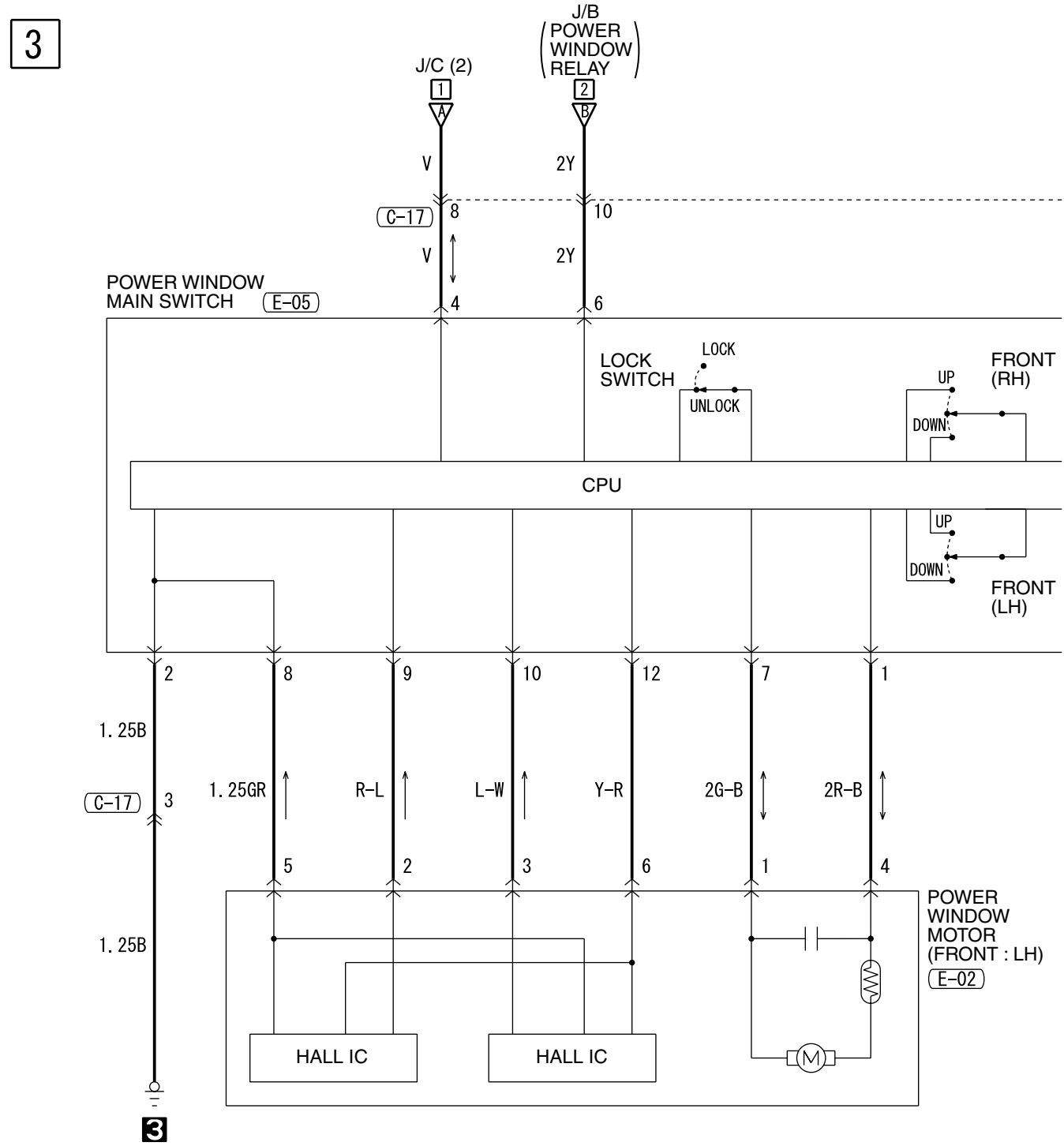

H4J11E09BA

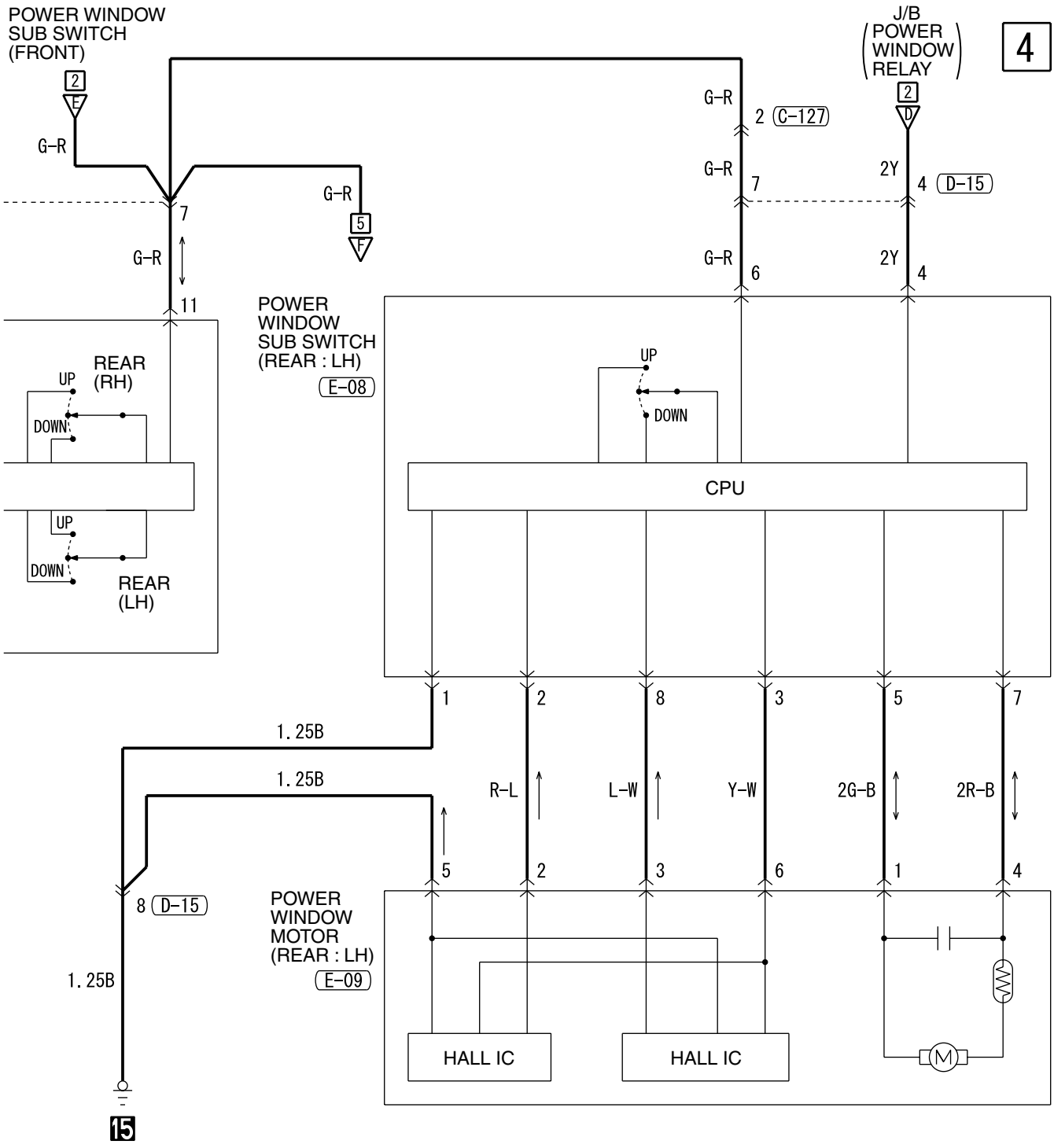

Wire colour code
B : Black LG : Light green G : Green L : Blue W : White Y : Yellow SB : Sky blue
BR : Brown O : Orange GR : Gray R : Red P : Pink V : Violet

H4J11E09BB

POWER WINDOWS <LH drive vehicles> (CONTINUED)

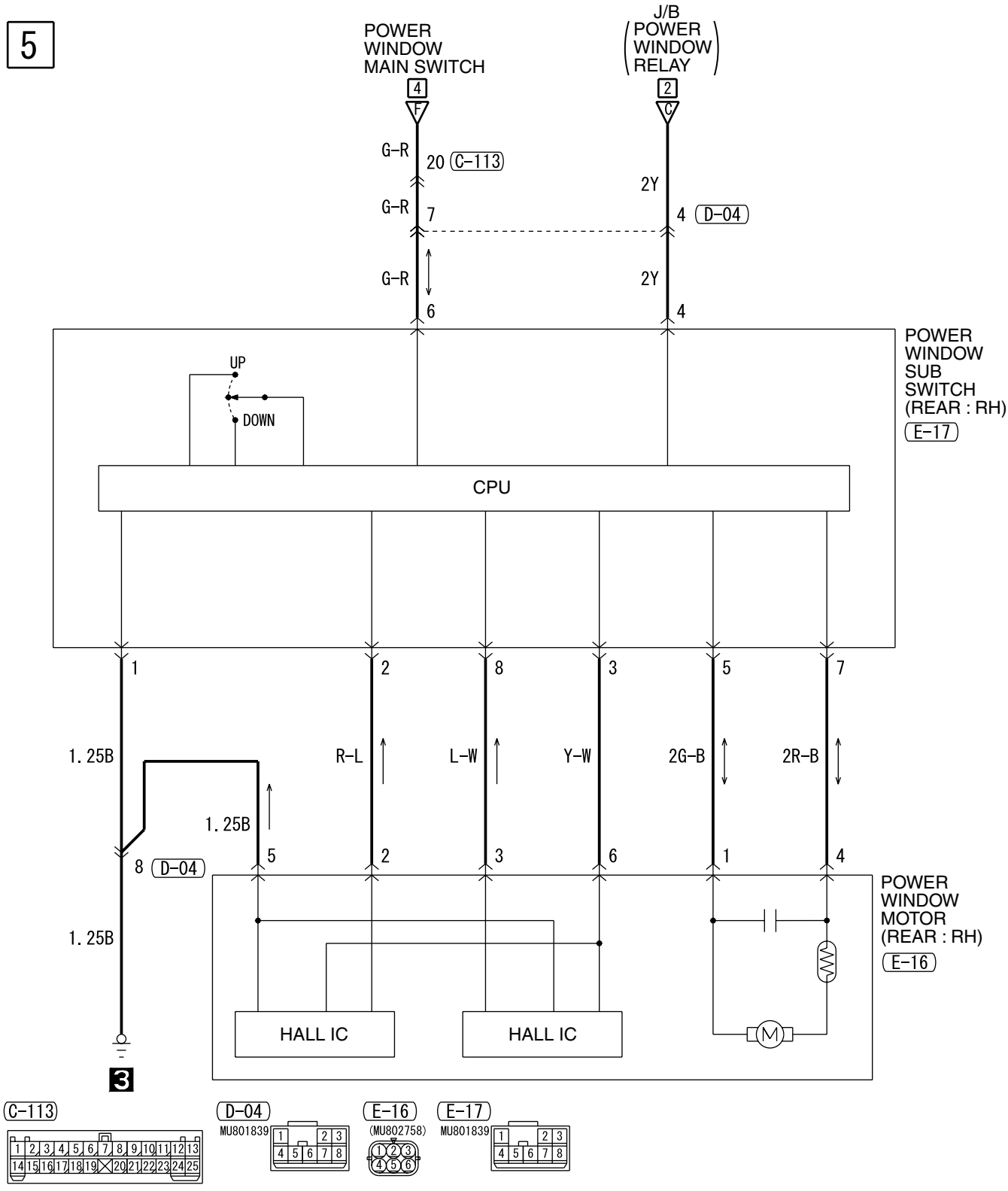

Wire colour code
B : Black LG : Light green G : Green L : Blue W : White Y : Yellow SB : Sky blue
BR : Brown O : Orange GR : Gray R : Red P : Pink V : Violet

H4J11E09CA

NOTES

POWER WINDOWS <RH drive vehicles>

M3030004600511

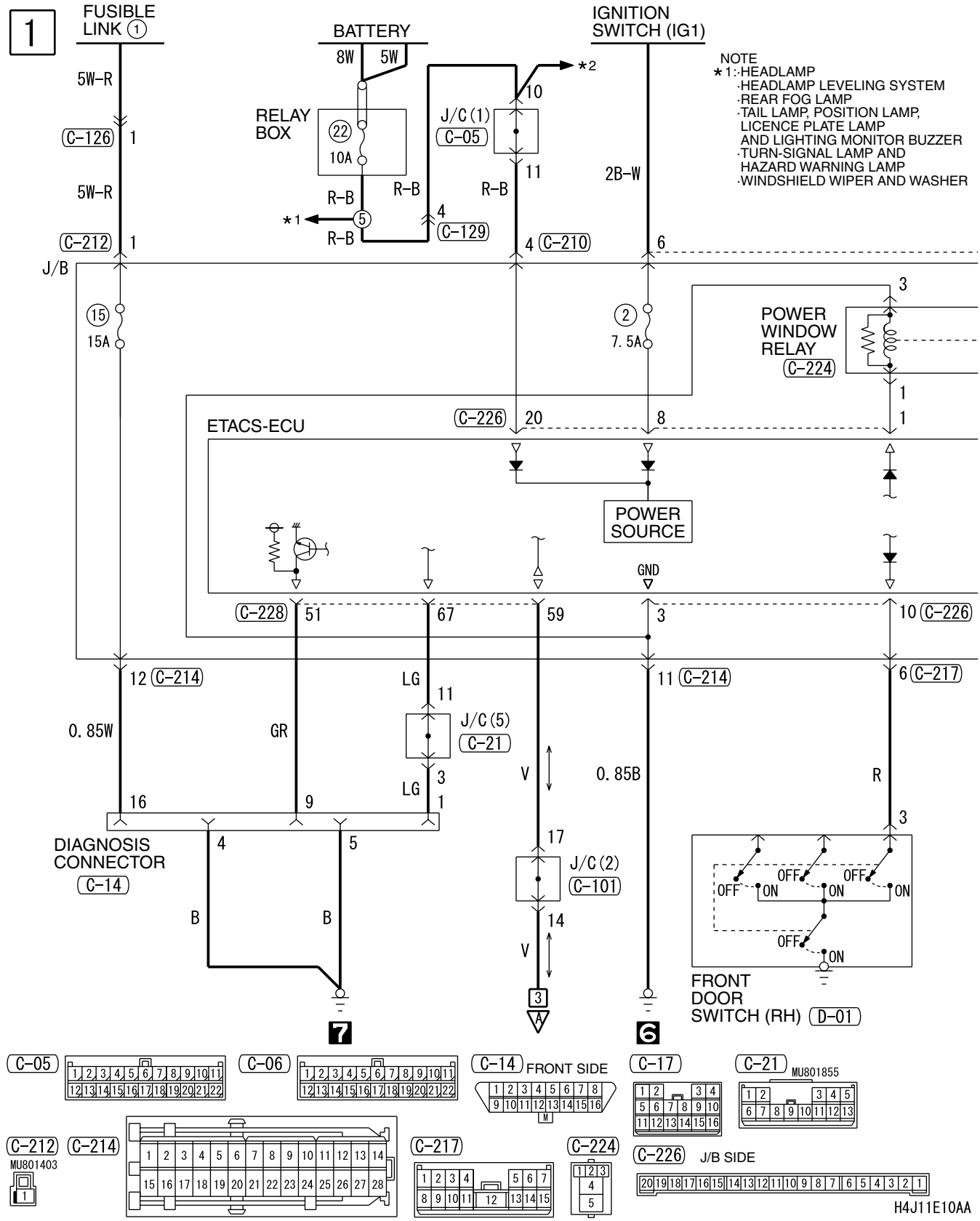

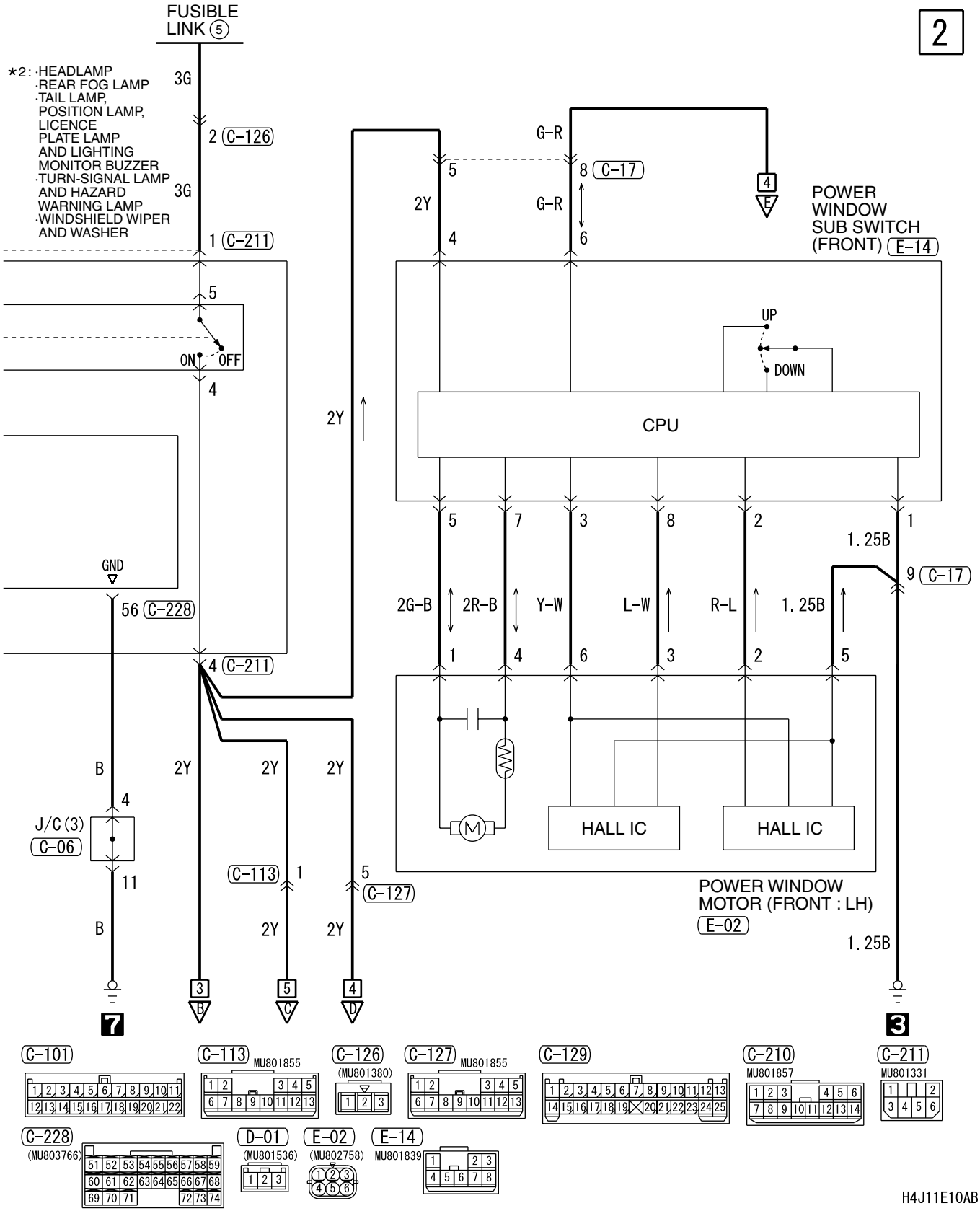
FUSIBLE LINK (5)
2
★2: ·HEADLAMP
·REAR FOG LAMP
·TAIL LAMP, POSITION LAMP, LICENCE PLATE LAMP AND LIGHTING MONITOR BUZZER
·TURN-SIGNAL LAMP AND HAZARD WARNING LAMP
·WINDSHIELD WIPER AND WASHER
3G
3G
2 (C-126)
1 (C-211)
5
ON
OFF
4
GND
56 (C-228)
4 (C-211)
B
2Y
2Y
2Y
4
J/C (3)
C-06
11
B
C-113
1
5
C-127
2Y
2Y
3
B
5
C
4
D
7
5
2Y
G-R
8 (C-17)
G-R
6
4
E
POWER WINDOW SUB SWITCH (FRONT) (E-14)
UP
DOWN
CPU
2Y
5
7
3
8
2
1
1.25B
9 (C-17)
2G-B
2R-B
Y-W
L-W
R-L
1.25B
1
4
6
3
2
5
M
HALL IC
HALL IC
POWER WINDOW MOTOR (FRONT : LH)
E-02
1.25B
3

C-101
C-113
MU801855
C-126
(MU801380)
C-127
MU801855
C-129
C-210
MU801857
C-211
MU801331
C-228
(MU803766)
D-01
(MU801536)
E-02
(MU802758)
E-14
MU801839

H4J11E10AB

POWER WINDOWS <RH drive vehicles> (CONTINUED)

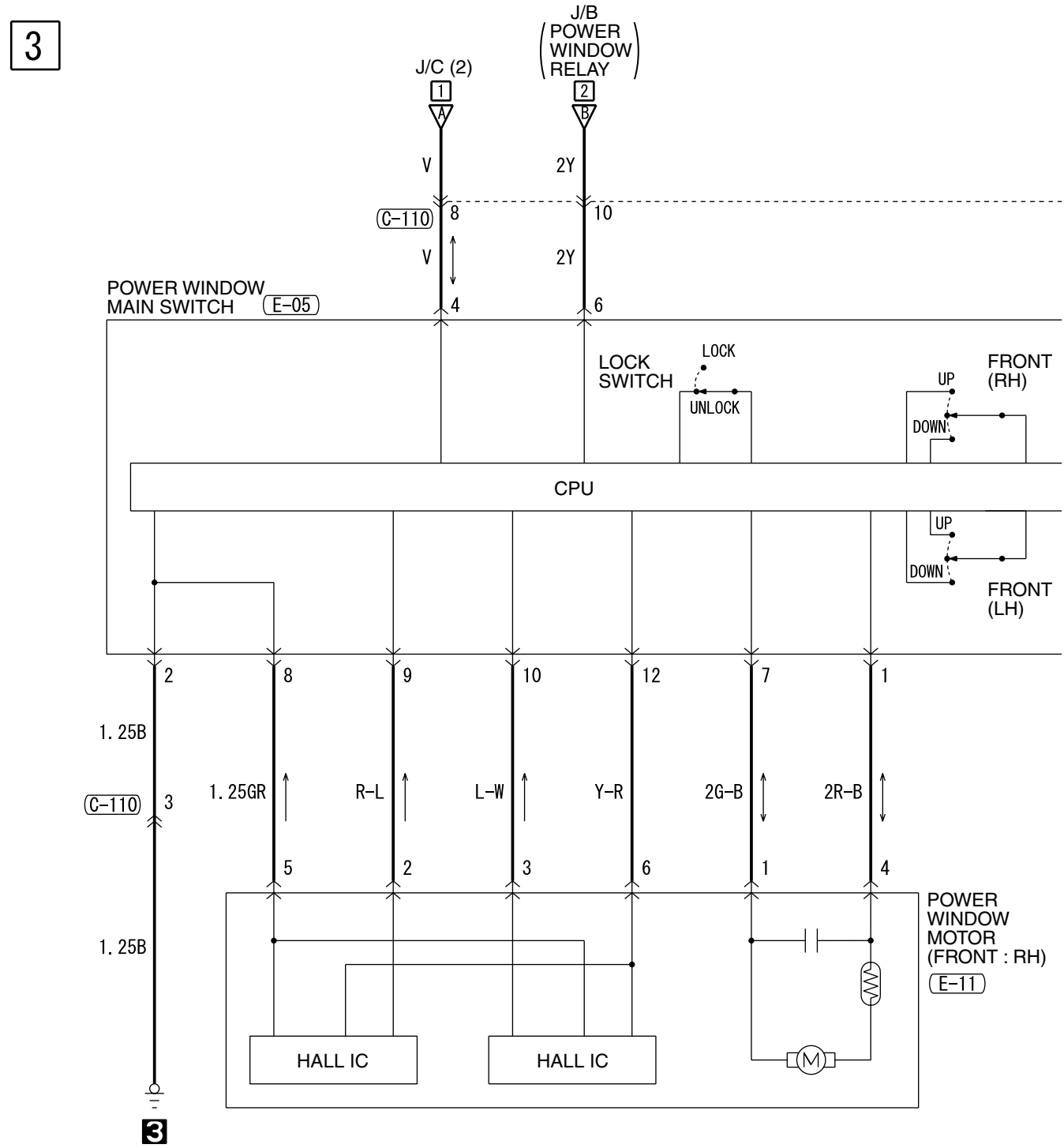

H4J11E10BA

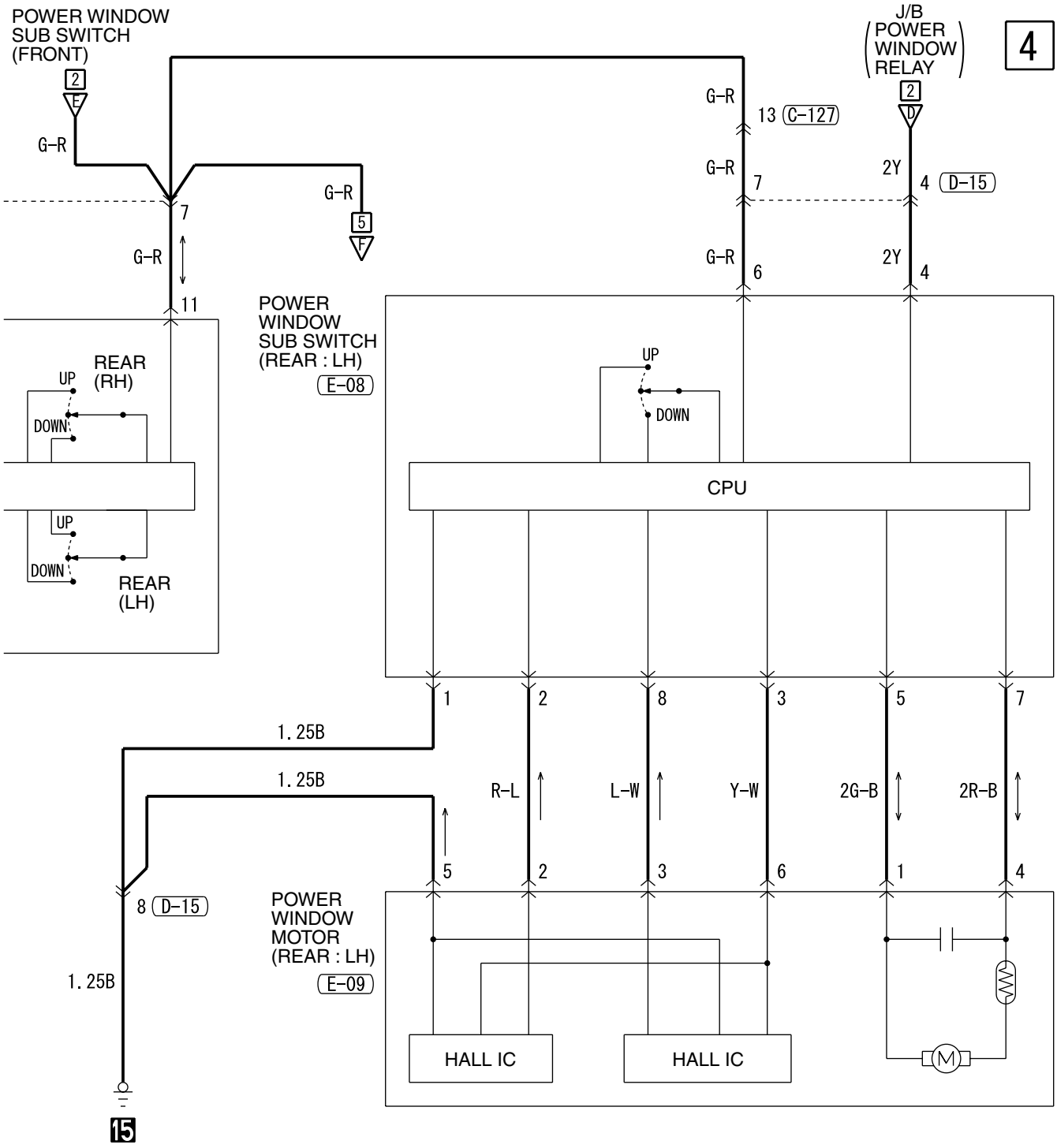

Wire colour code
B : Black LG : Light green G : Green L : Blue W : White Y : Yellow SB : Sky blue
BR : Brown O : Orange GR : Gray R : Red P : Pink V : Violet

H4J11E10BB

POWER WINDOWS <RH drive vehicles> (CONTINUED)

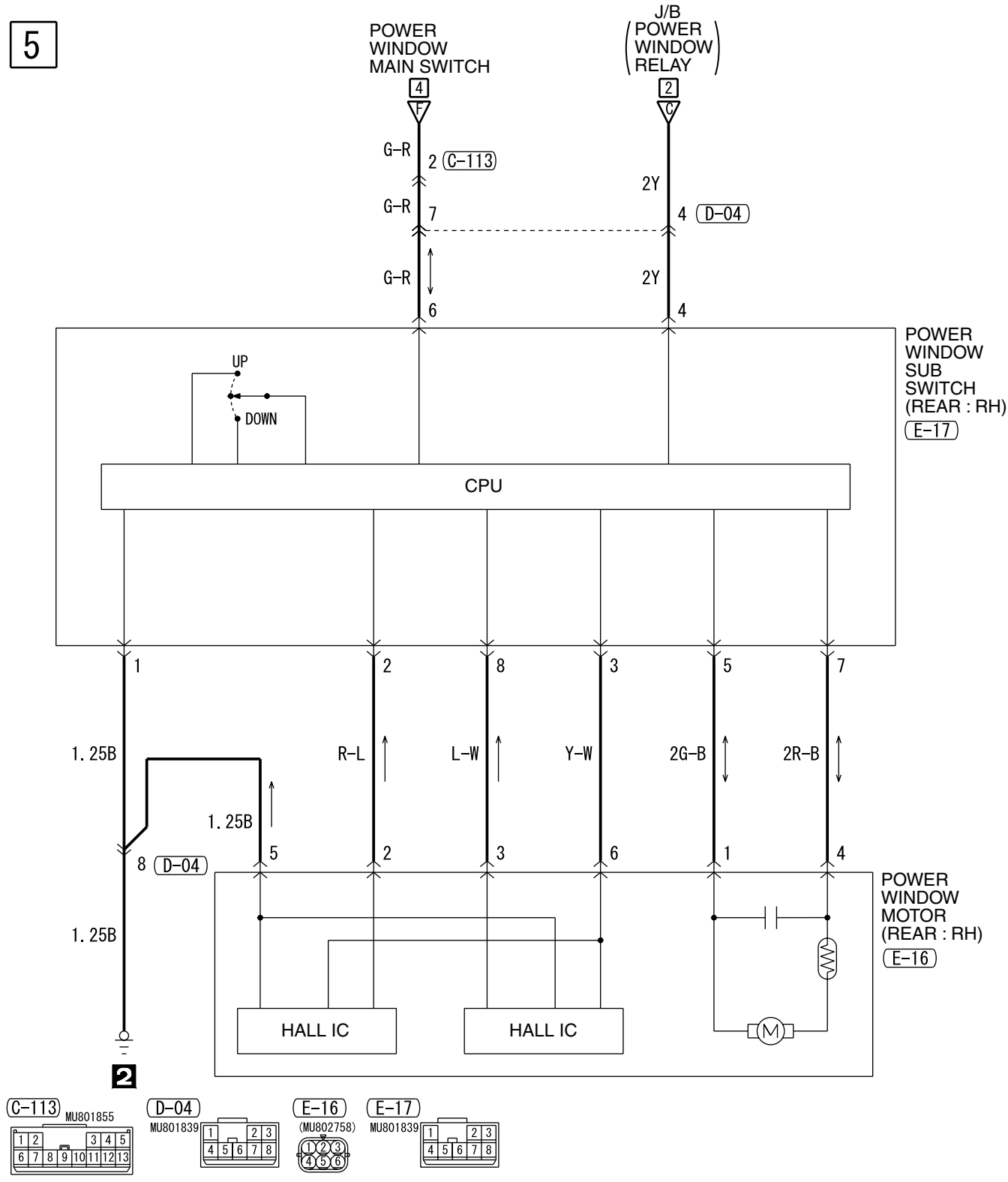

Wire colour code
B : Black LG : Light green G : Green L : Blue W : White Y : Yellow SB : Sky blue
BR : Brown O : Orange GR : Gray R : Red P : Pink V : Violet

H4J11E10CA

NOTES

CENTRAL DOOR LOCKING SYSTEM

CENTRAL DOOR LOCKING SYSTEM <LH drive vehicles>

M3030004700778

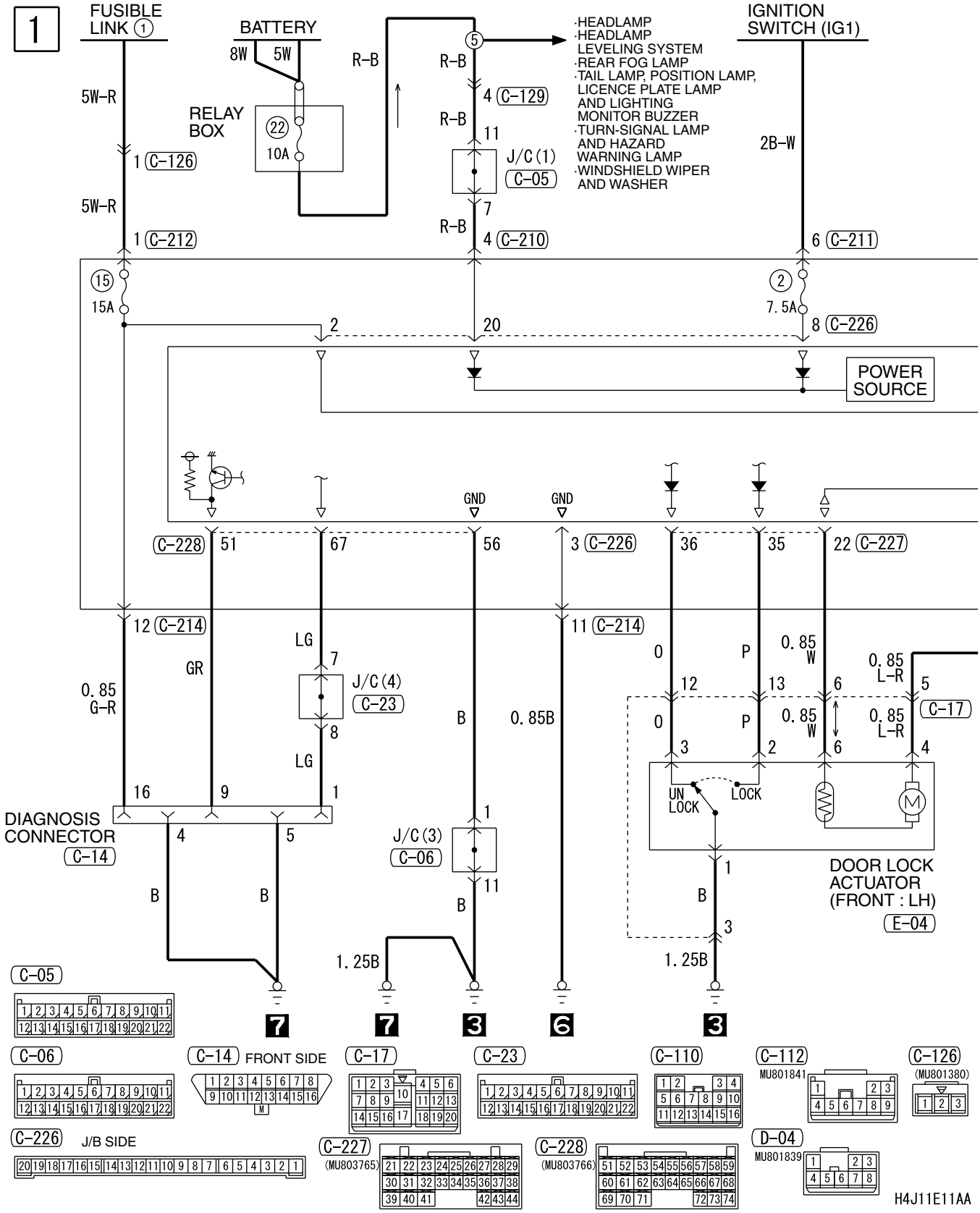

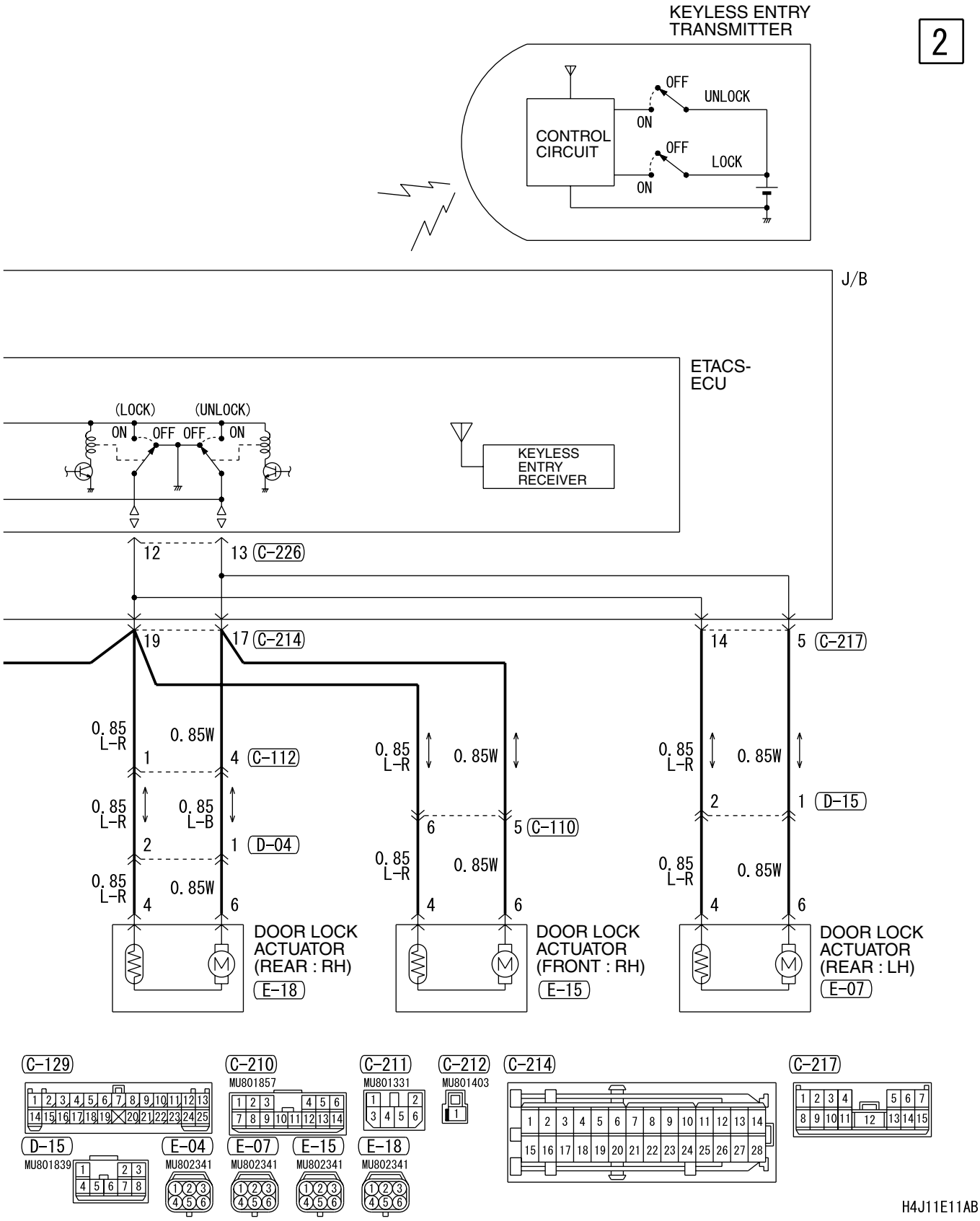
KEYLESS ENTRY TRANSMITTER
2
OFF
UNLOCK
ON
CONTROL CIRCUIT
OFF
LOCK
ON
J/B
ETACS-ECU
(LOCK)
(UNLOCK)
ON
OFF
OFF
ON
KEYLESS ENTRY RECEIVER
12
13 C-226
19
17 C-214
14
5 C-217
0.85 L-R
0.85W
1
4 C-112
0.85 L-R
0.85 L-B
2
1 D-04
0.85 L-R
0.85W
4
6
DOOR LOCK ACTUATOR (REAR : RH)
E-18
0.85 L-R
0.85W
6
5 C-110
0.85 L-R
0.85W
4
6
DOOR LOCK ACTUATOR (FRONT : RH)
E-15
0.85 L-R
0.85W
2
1 D-15
0.85 L-R
0.85W
4
6
DOOR LOCK ACTUATOR (REAR : LH)
E-07
C-129
C-210
MU801857
C-211
MU801331
C-212
MU801403
C-214
C-217
D-15
MU801839
E-04
MU802341
E-07
MU802341
E-15
MU802341
E-18
MU802341
H4J11E11AB

CENTRAL DOOR LOCKING SYSTEM <LH drive vehicles> (CONTINUED)

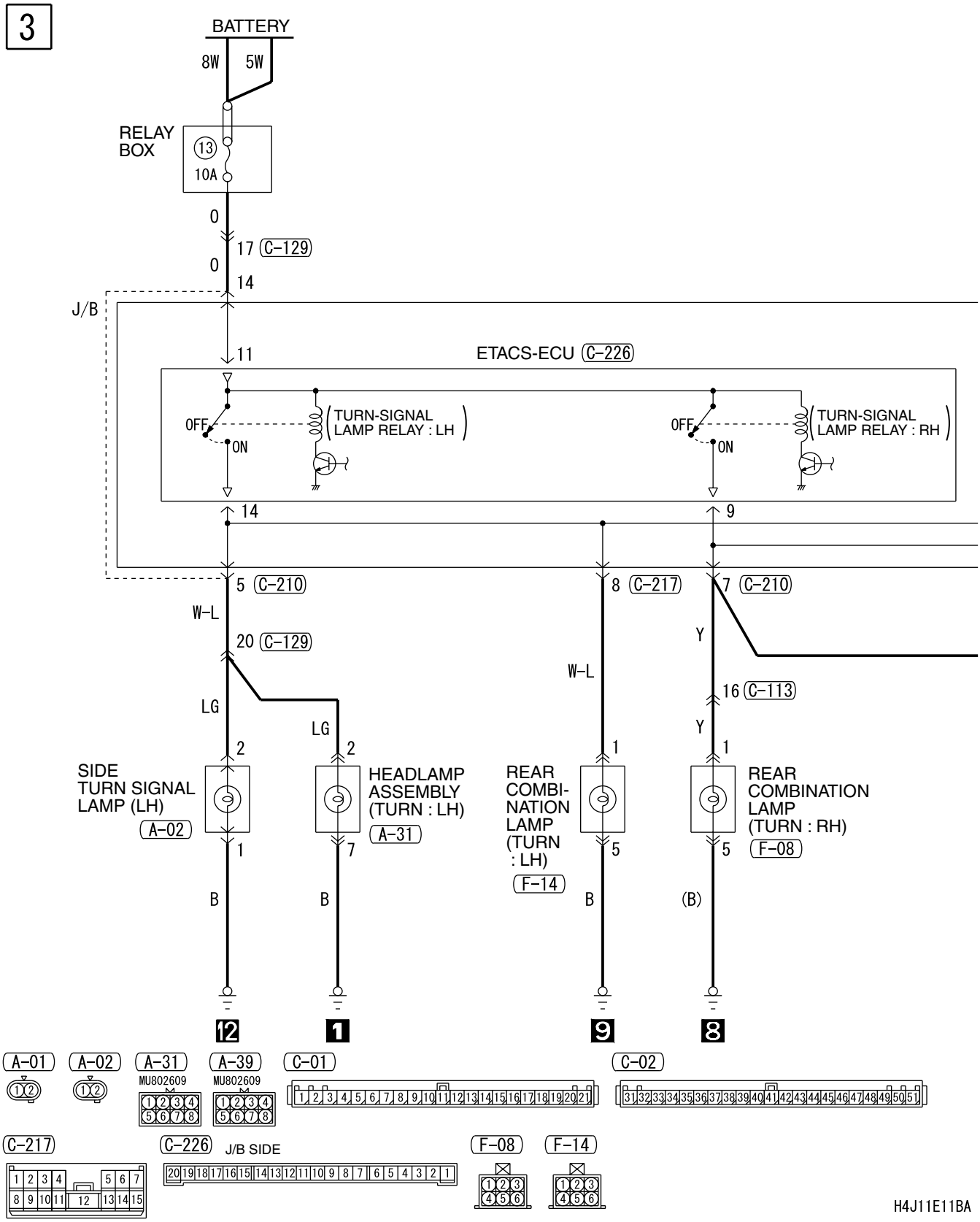

4

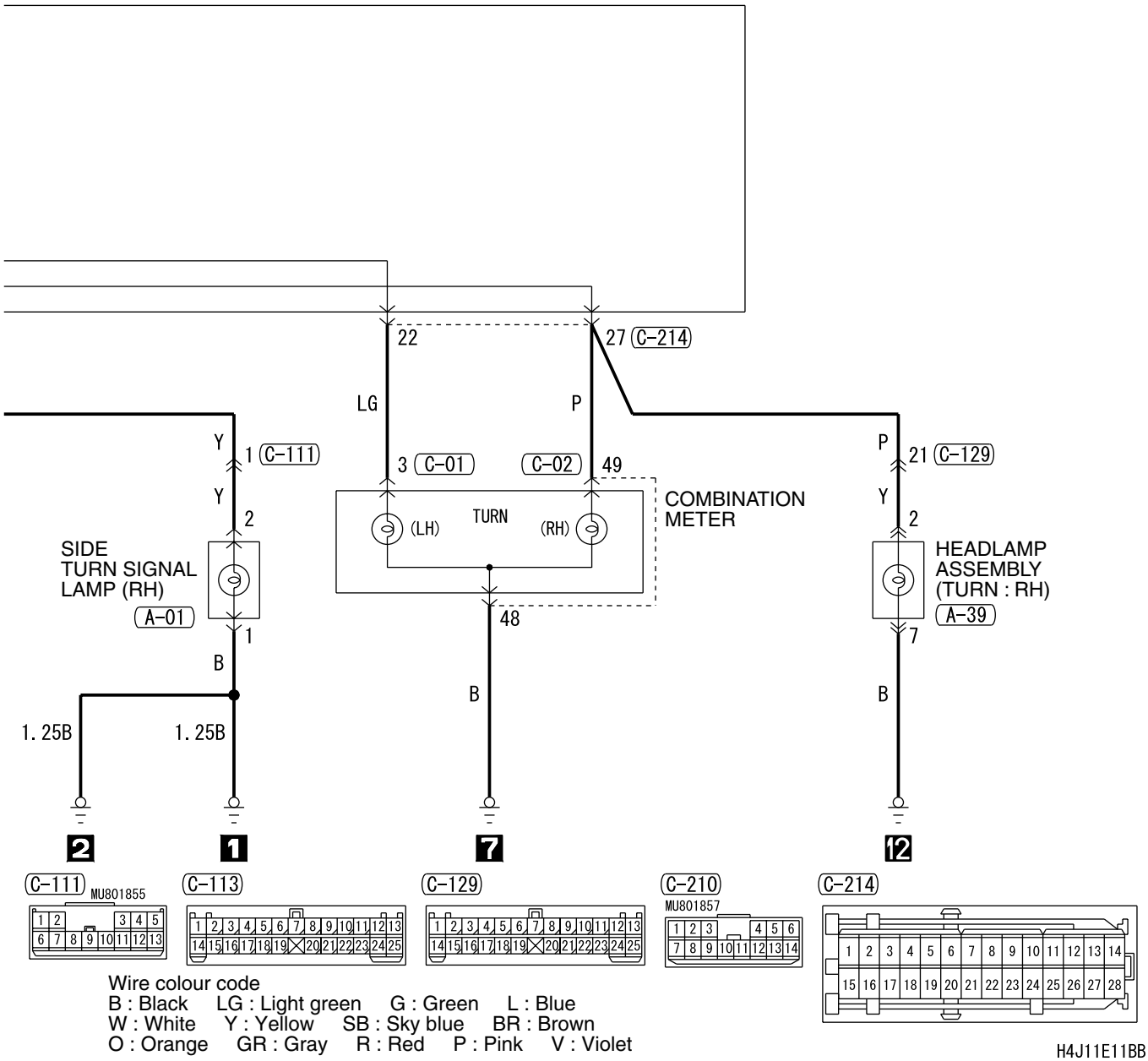

Wire colour code
B : Black LG : Light green G : Green L : Blue
W : White Y : Yellow SB : Sky blue BR : Brown
O : Orange GR : Gray R : Red P : Pink V : Violet

H4J11E11BB

CENTRAL DOOR LOCKING SYSTEM <LH drive vehicles> (CONTINUED)

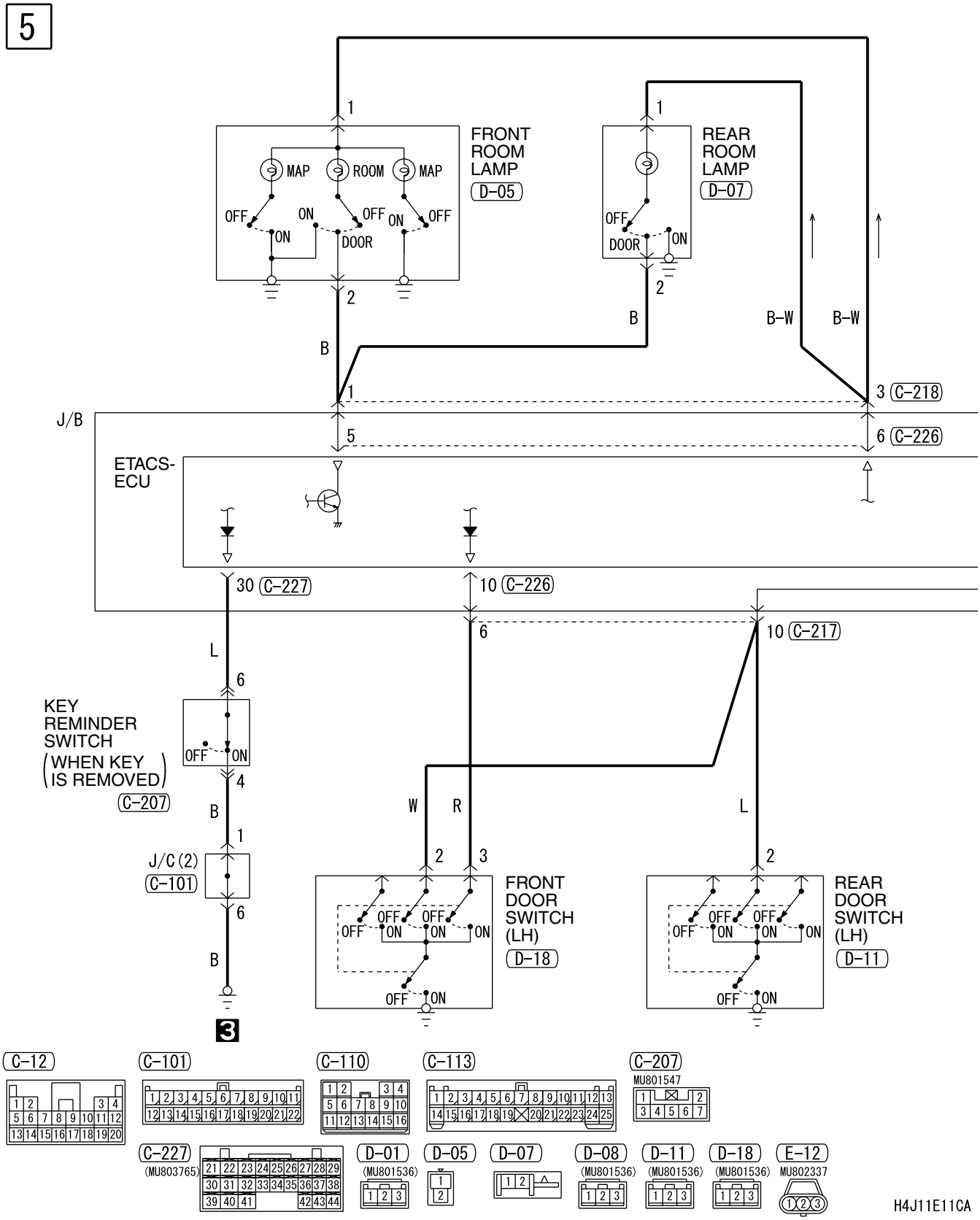

6

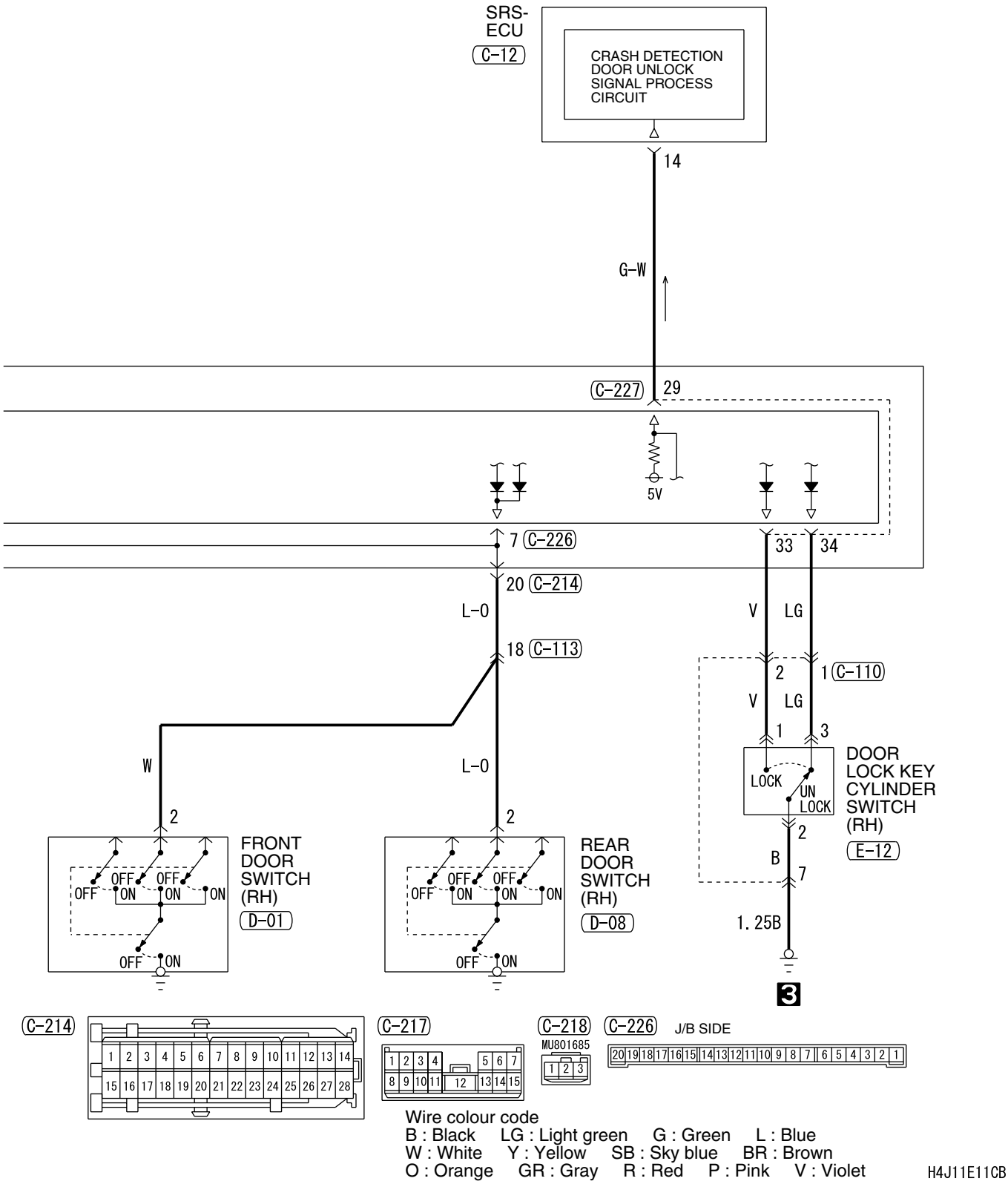

Wire colour code
B : Black LG : Light green G : Green L : Blue
W : White Y : Yellow SB : Sky blue BR : Brown
O : Orange GR : Gray R : Red P : Pink V : Violet

H4J11E11CB

CENTRAL DOOR LOCKING SYSTEM <RH drive vehicles>

M3030004700789

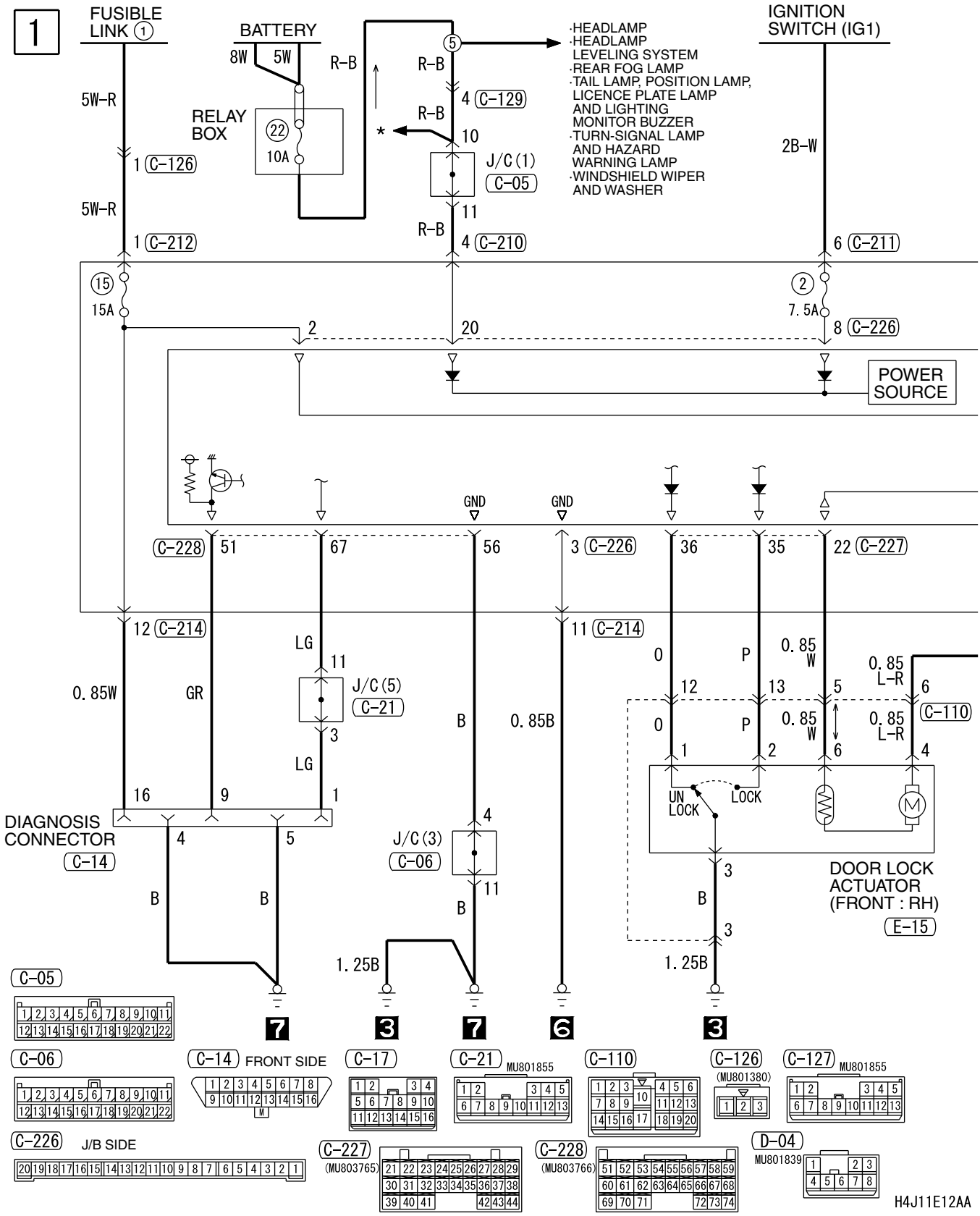

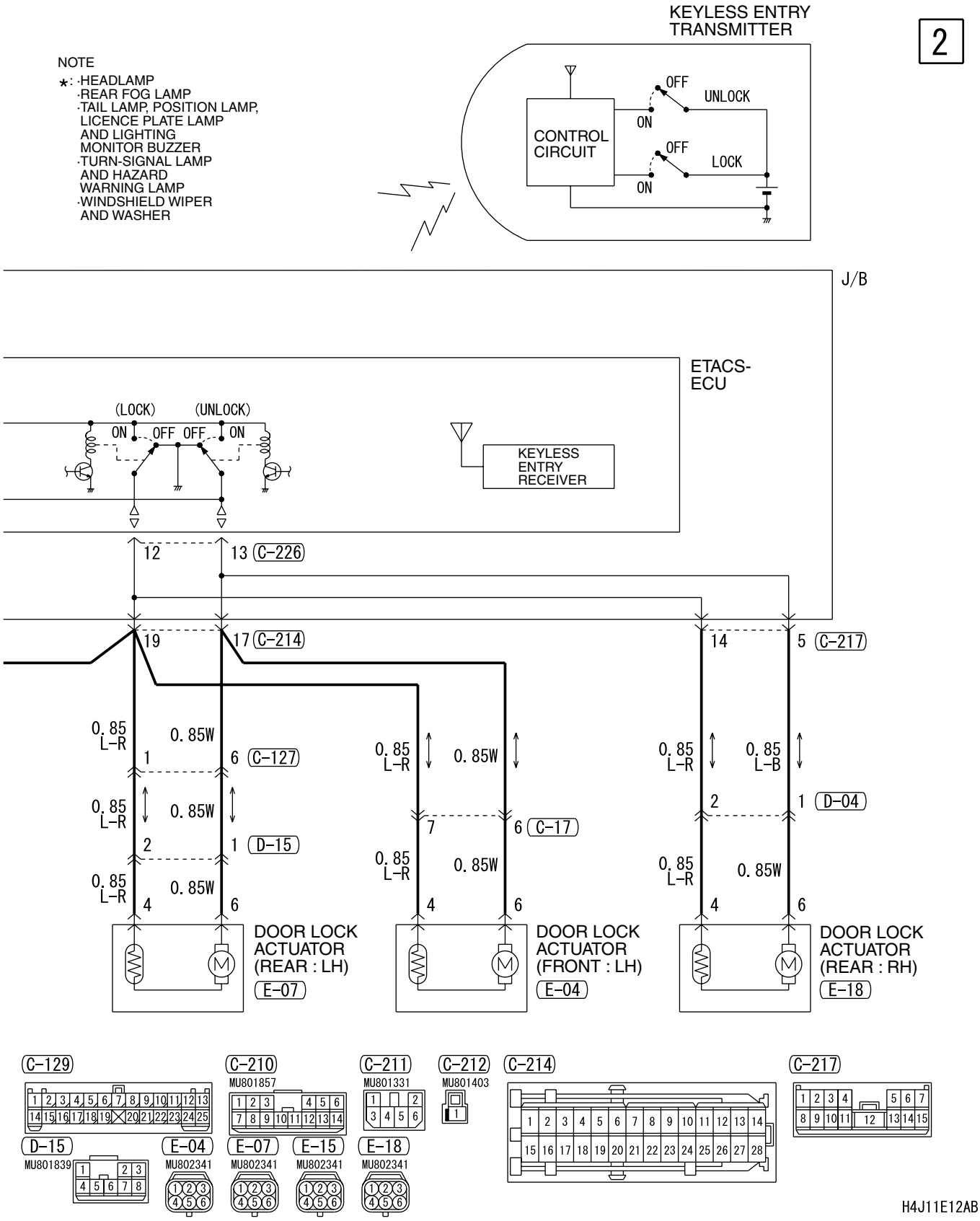
KEYLESS ENTRY TRANSMITTER
2
NOTE
*: ·HEADLAMP
·REAR FOG LAMP
·TAIL LAMP, POSITION LAMP, LICENCE PLATE LAMP AND LIGHTING
MONITOR BUZZER
·TURN-SIGNAL LAMP AND HAZARD WARNING LAMP
·WINDSHIELD WIPER AND WASHER
CONTROL CIRCUIT
OFF
UNLOCK
ON
OFF
LOCK
ON
J/B
ETACS-ECU
(LOCK)
(UNLOCK)
ON
OFF
OFF
ON
KEYLESS ENTRY RECEIVER
12
13 C-226
19
17 C-214
14
5 C-217
0.85 L-R
0.85W
1
6 C-127
2
1 D-15
4
6
DOOR LOCK ACTUATOR (REAR : LH) E-07
7
6 C-17
DOOR LOCK ACTUATOR (FRONT : LH) E-04
0.85 L-B
2
1 D-04
DOOR LOCK ACTUATOR (REAR : RH) E-18
C-129
C-210
MU801857
C-211
MU801331
C-212
MU801403
C-214
C-217
D-15
MU801839
E-04
MU802341
E-07
MU802341
E-15
MU802341
E-18
MU802341
H4J11E12AB

CENTRAL DOOR LOCKING SYSTEM <RH drive vehicles> (CONTINUED)

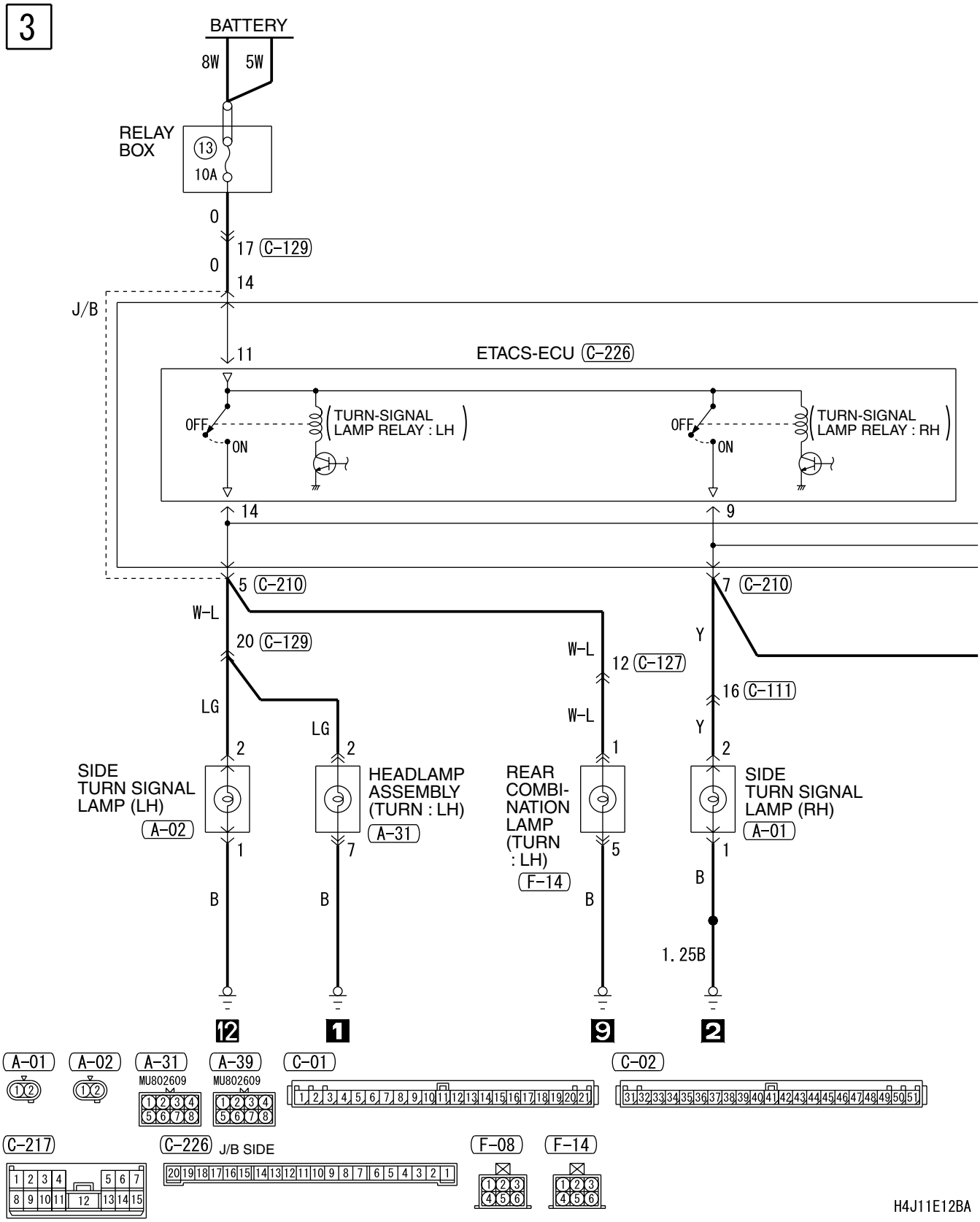

4

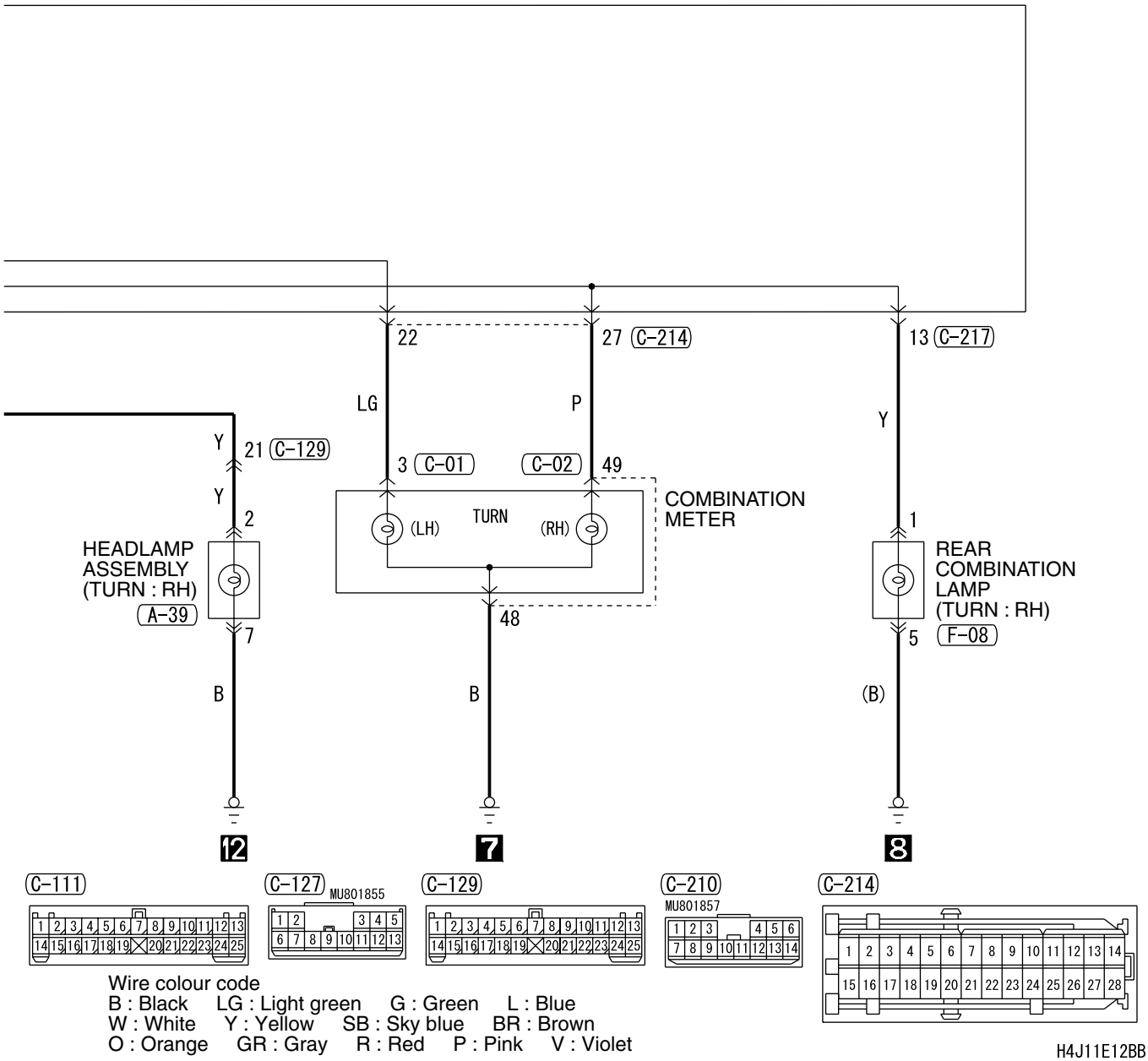

H4J11E12BB

CENTRAL DOOR LOCKING SYSTEM <RH drive vehicles> (CONTINUED)

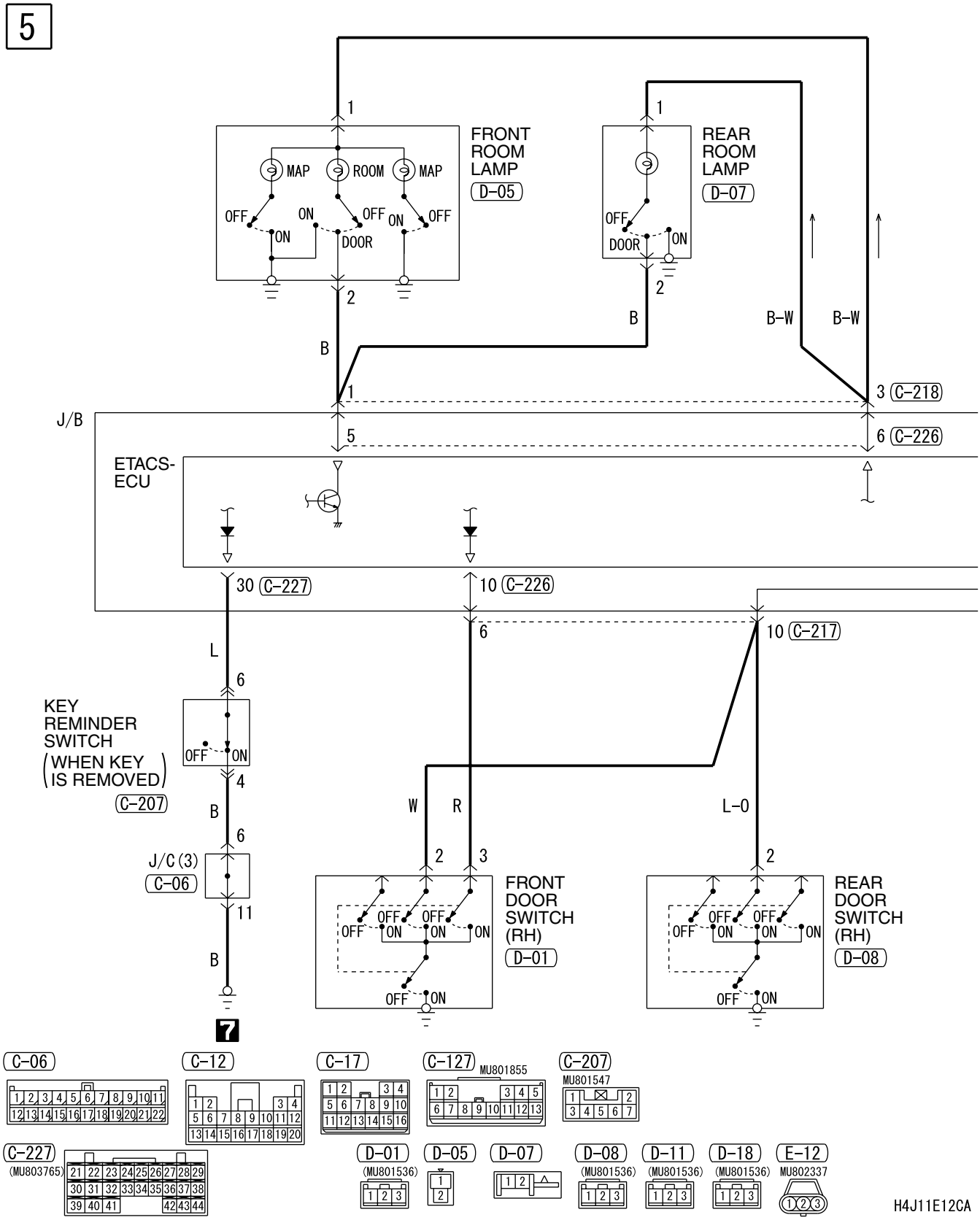

6

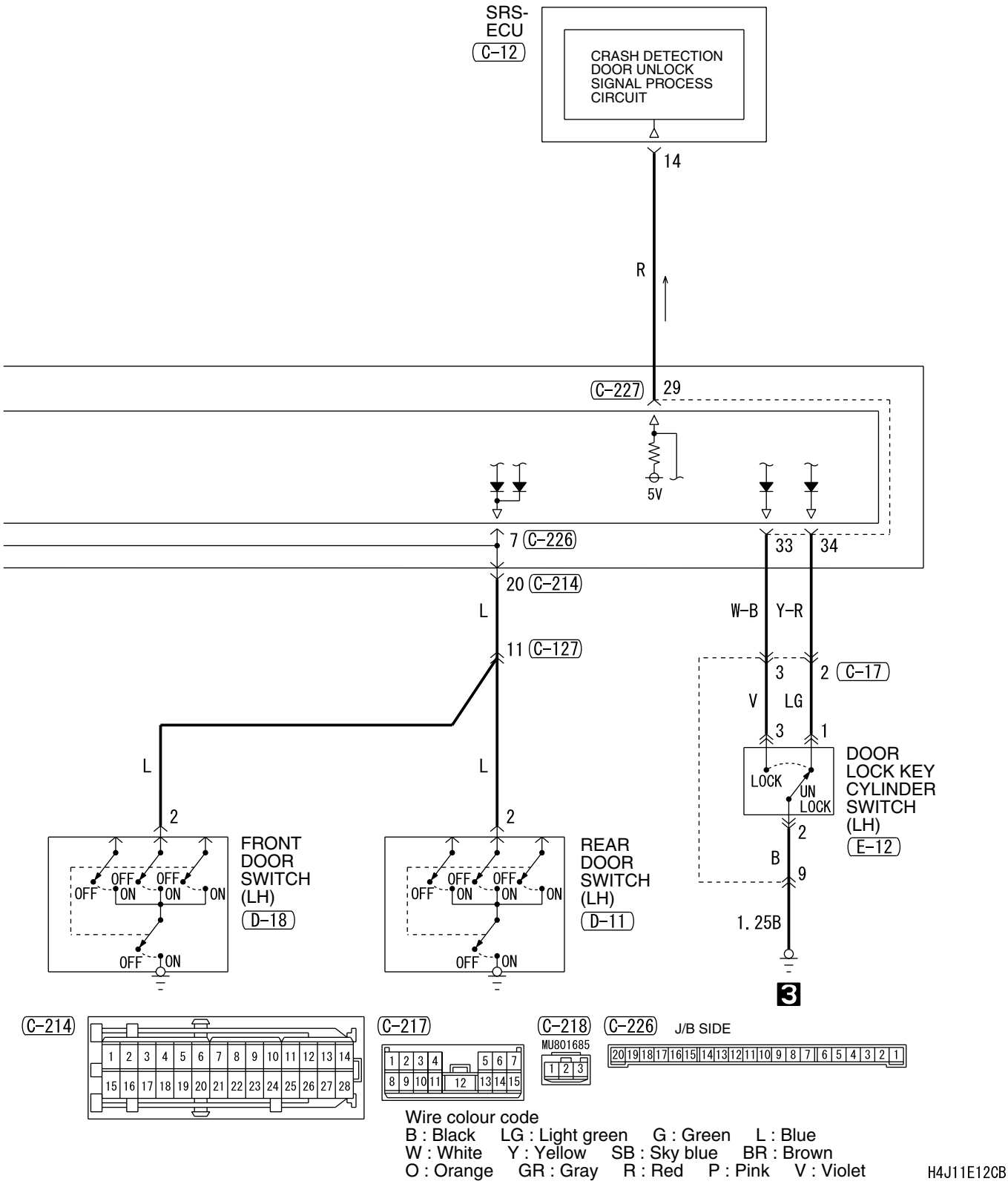

Wire colour code
B : Black LG : Light green G : Green L : Blue
W : White Y : Yellow SB : Sky blue BR : Brown
O : Orange GR : Gray R : Red P : Pink V : Violet

H4J11E12CB

MANUAL AIR CONDITIONER

MANUAL AIR CONDITIONER <LH drive vehicles>

M3030005500476

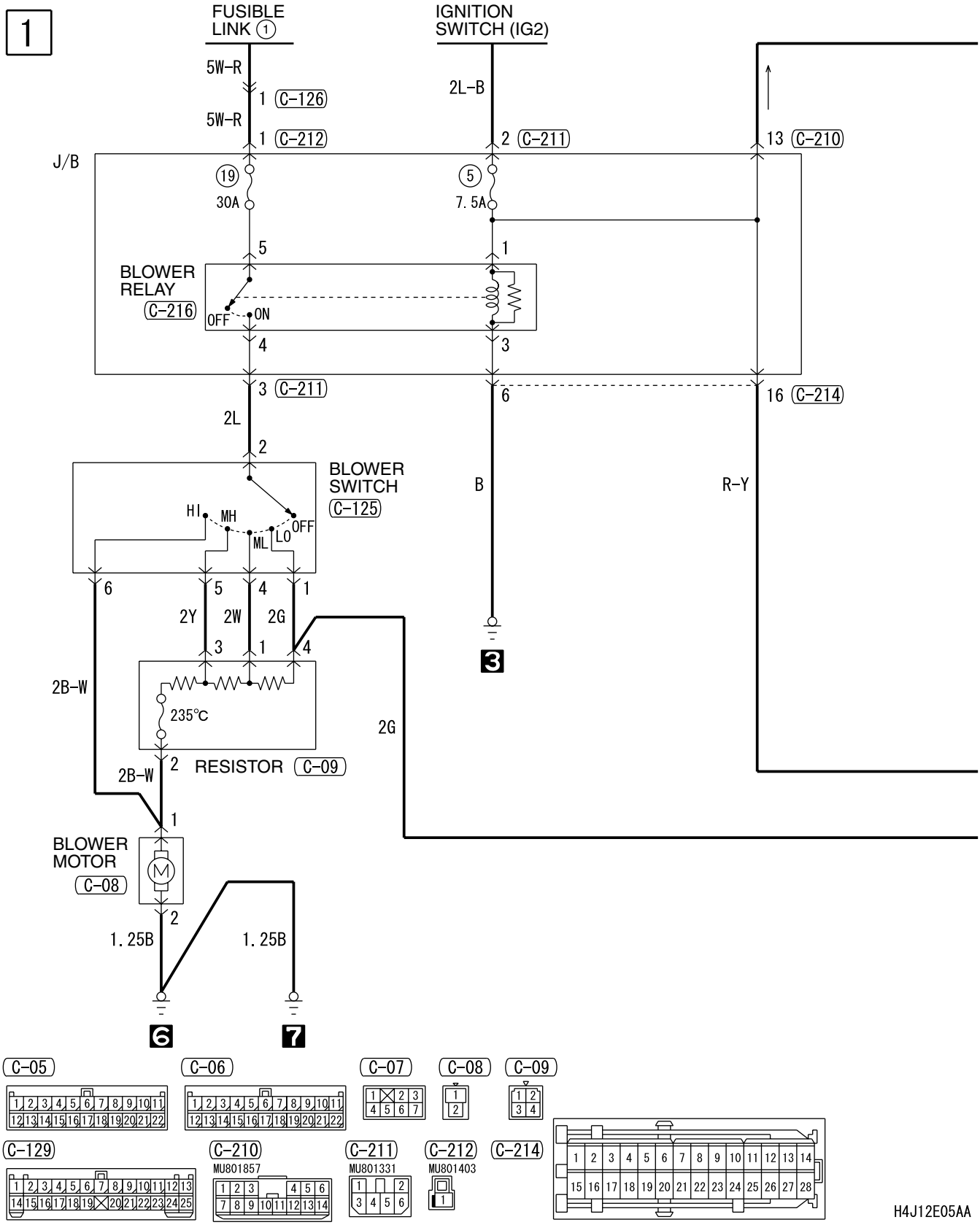

H4J12E05AA

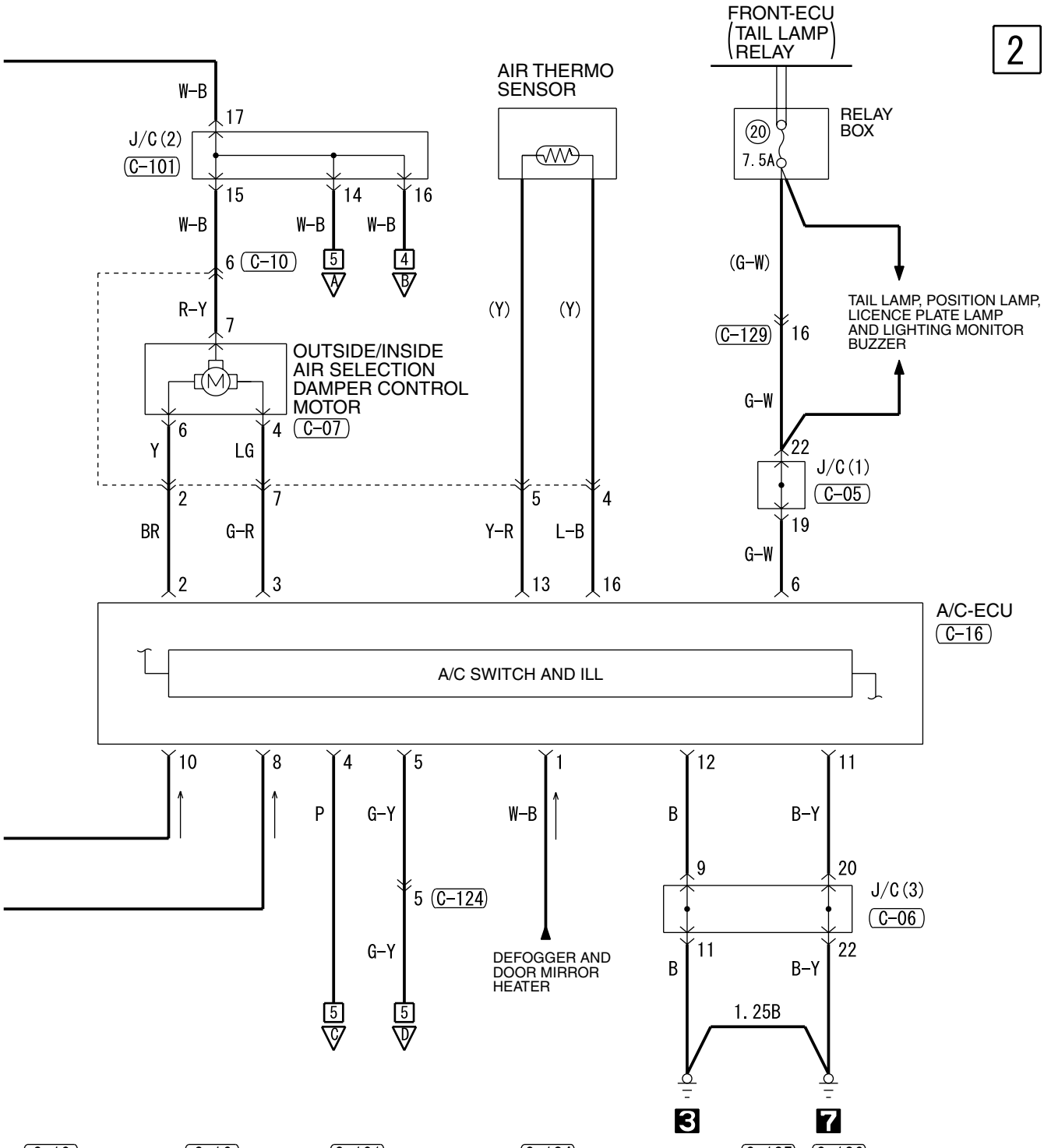

C-10 MU801837

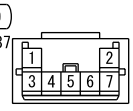

C-16 (MU801584)

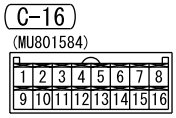

C-101

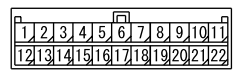

C-124

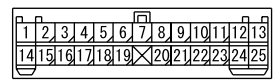

C-125



C-126 (MU801380)



C-216

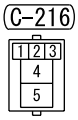

Wire colour code
B : Black LG : Light green G : Green L : Blue W : White Y : Yellow SB : Sky blue
BR : Brown O : Orange GR : Gray R : Red P : Pink V : Violet

H4J12E05AB

MANUAL AIR CONDITIONER <LH drive vehicles> (CONTINUED)

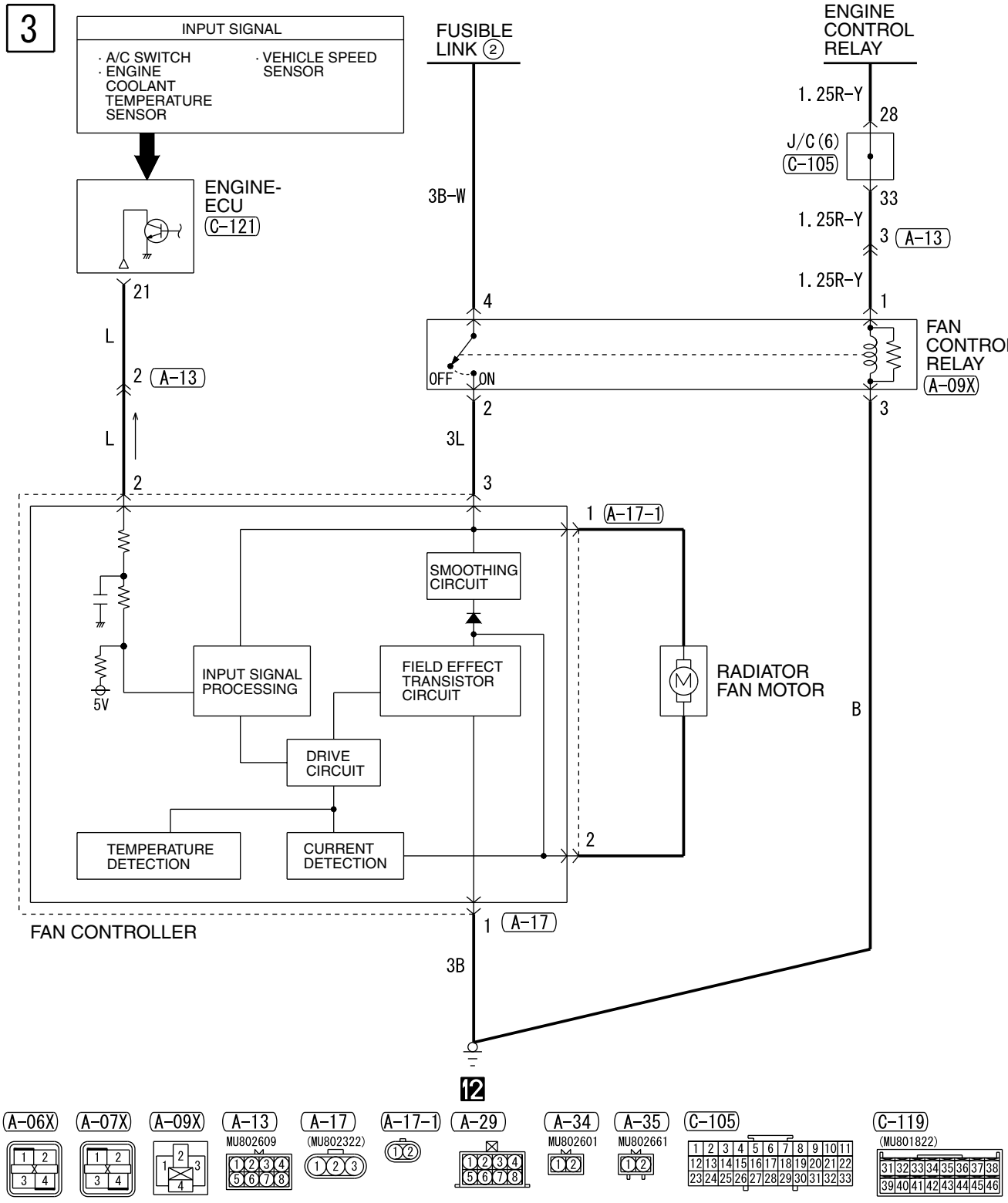

H4J12E05BA

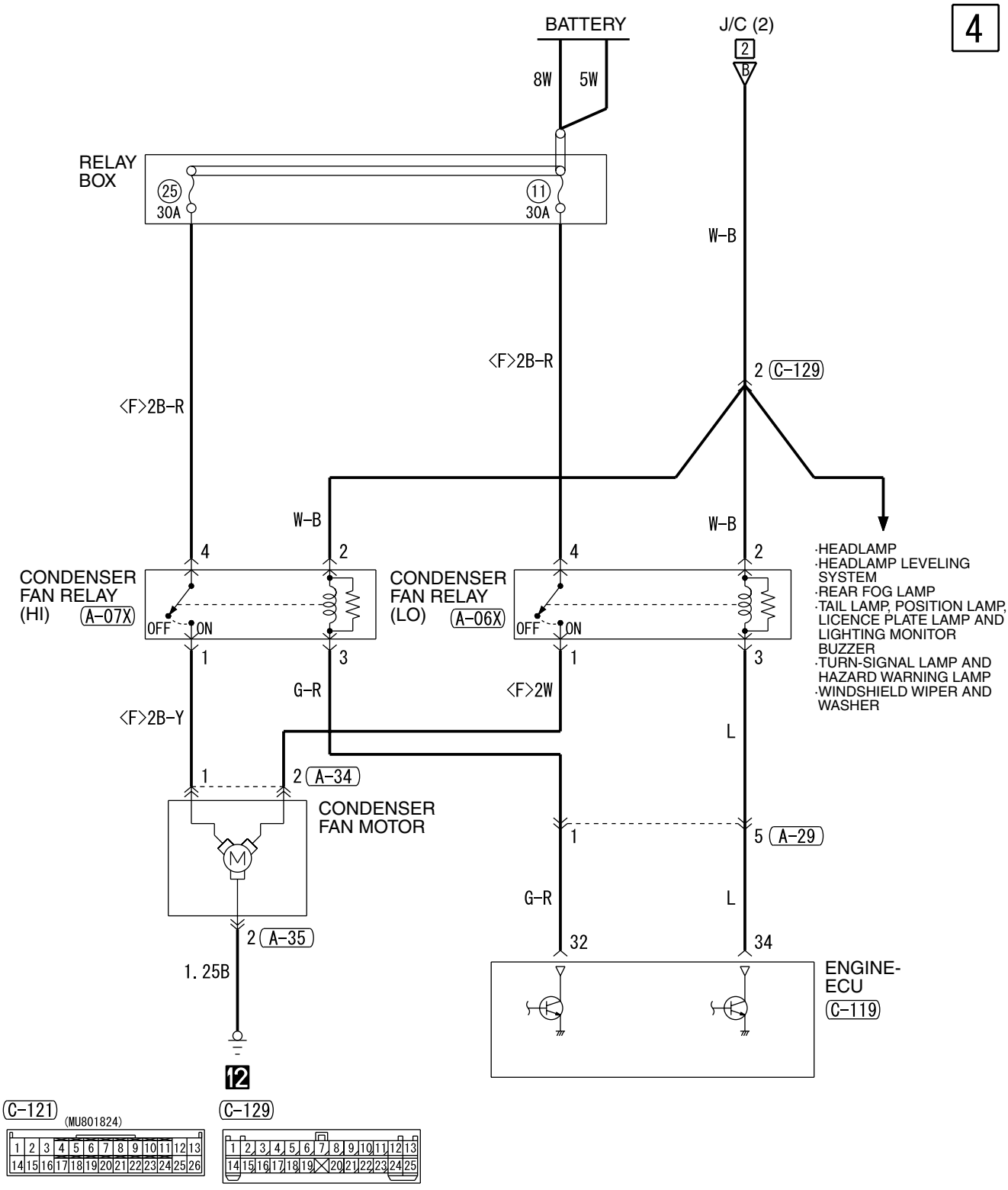

Wire colour code
B : Black LG : Light green G : Green L : Blue W : White Y : Yellow SB : Sky blue
BR : Brown O : Orange GR : Gray R : Red P : Pink V : Violet

H4J12E05BB

MANUAL AIR CONDITIONER <LH drive vehicles> (CONTINUED)

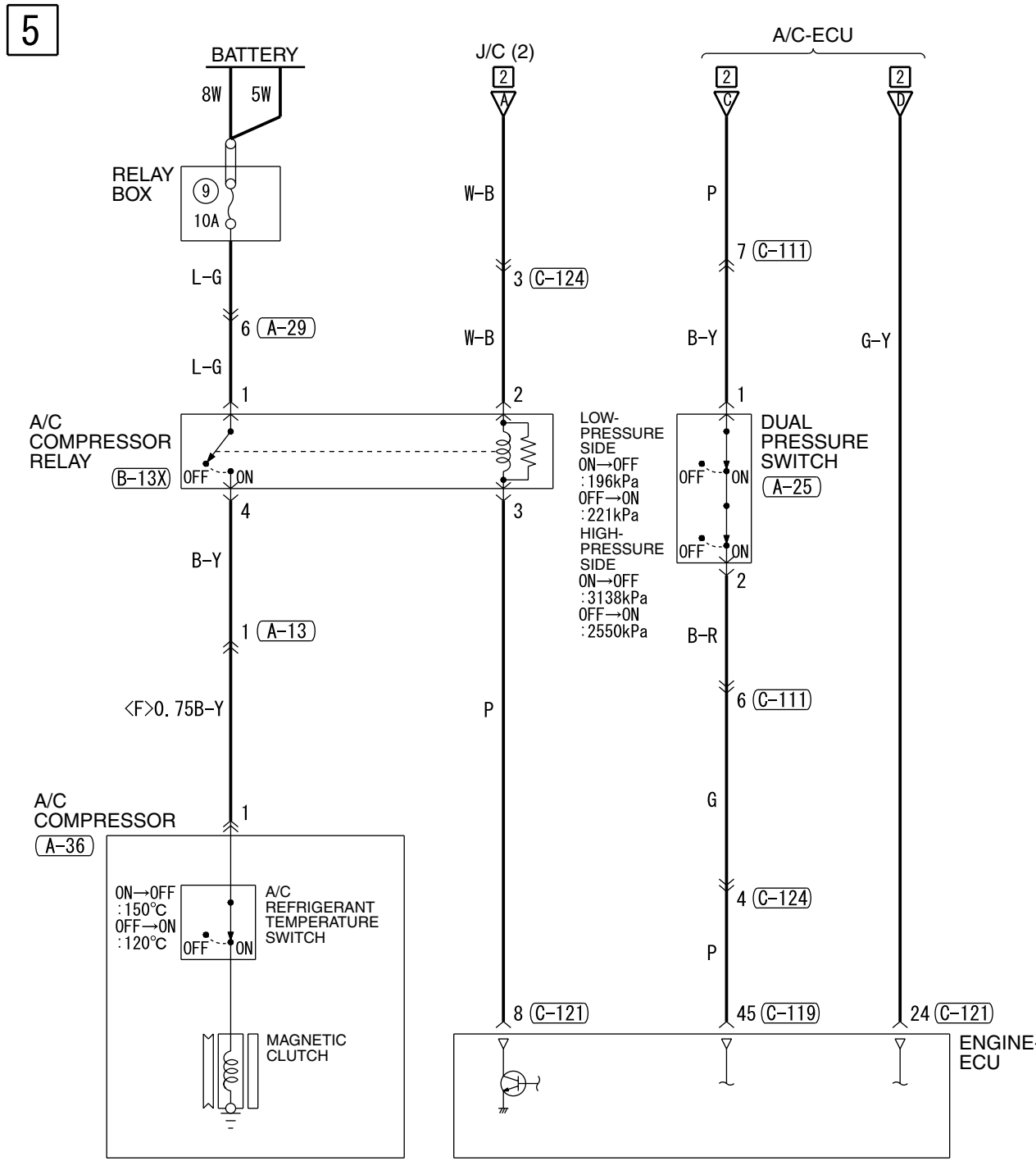

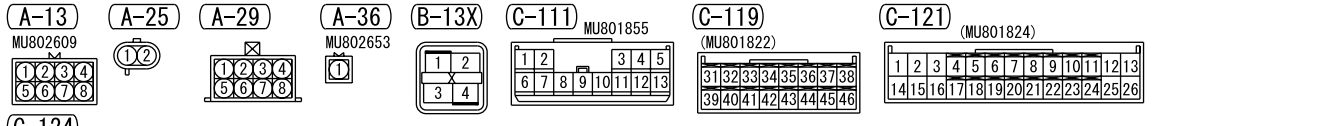

Wire colour code
B : Black LG : Light green G : Green L : Blue
W : White Y : Yellow SB : Sky blue BR : Brown
O : Orange GR : Gray R : Red P : Pink V : Violet

H4J12E05CA

NOTES

MANUAL AIR CONDITIONER <RH drive vehicles>

M3030005500487

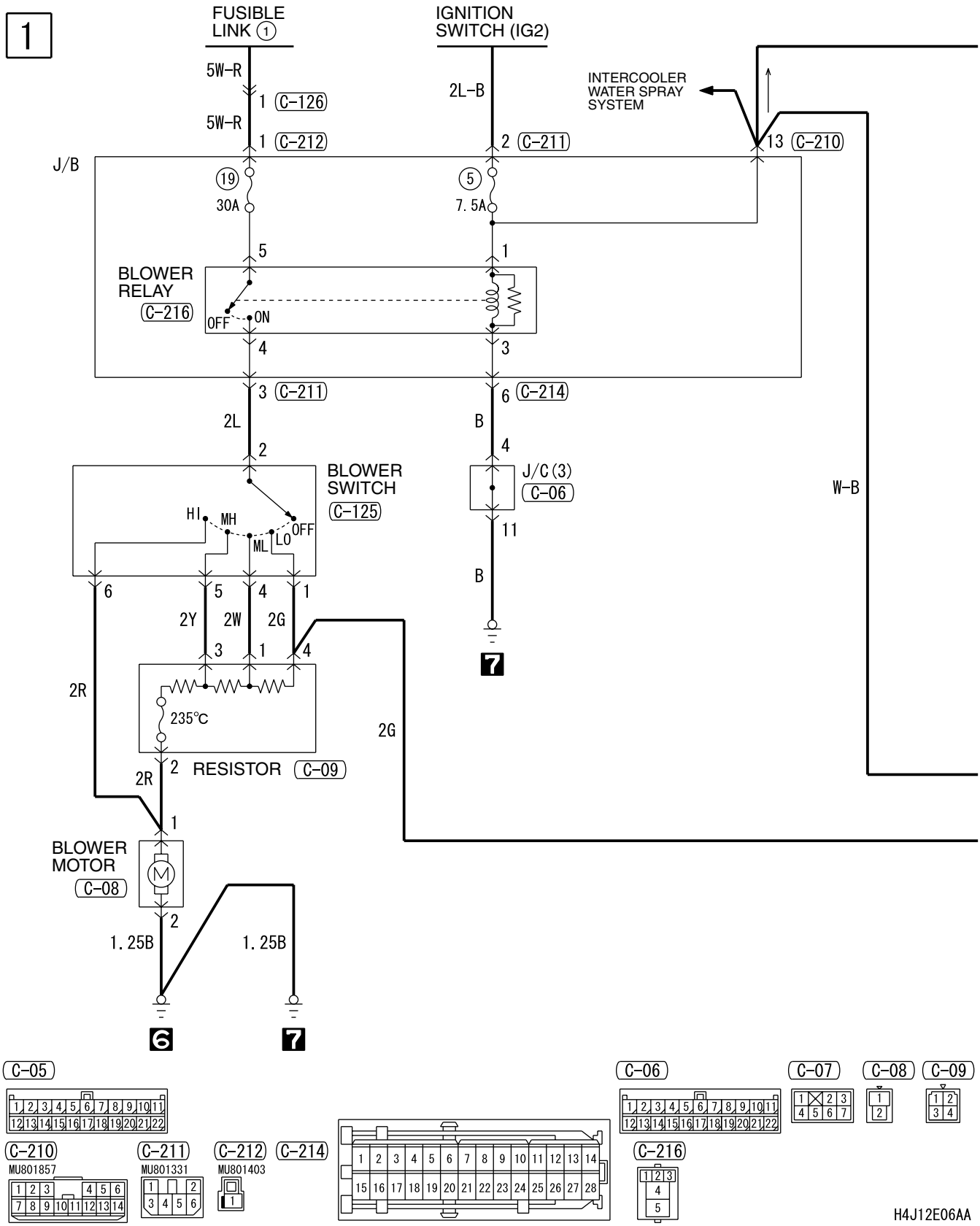

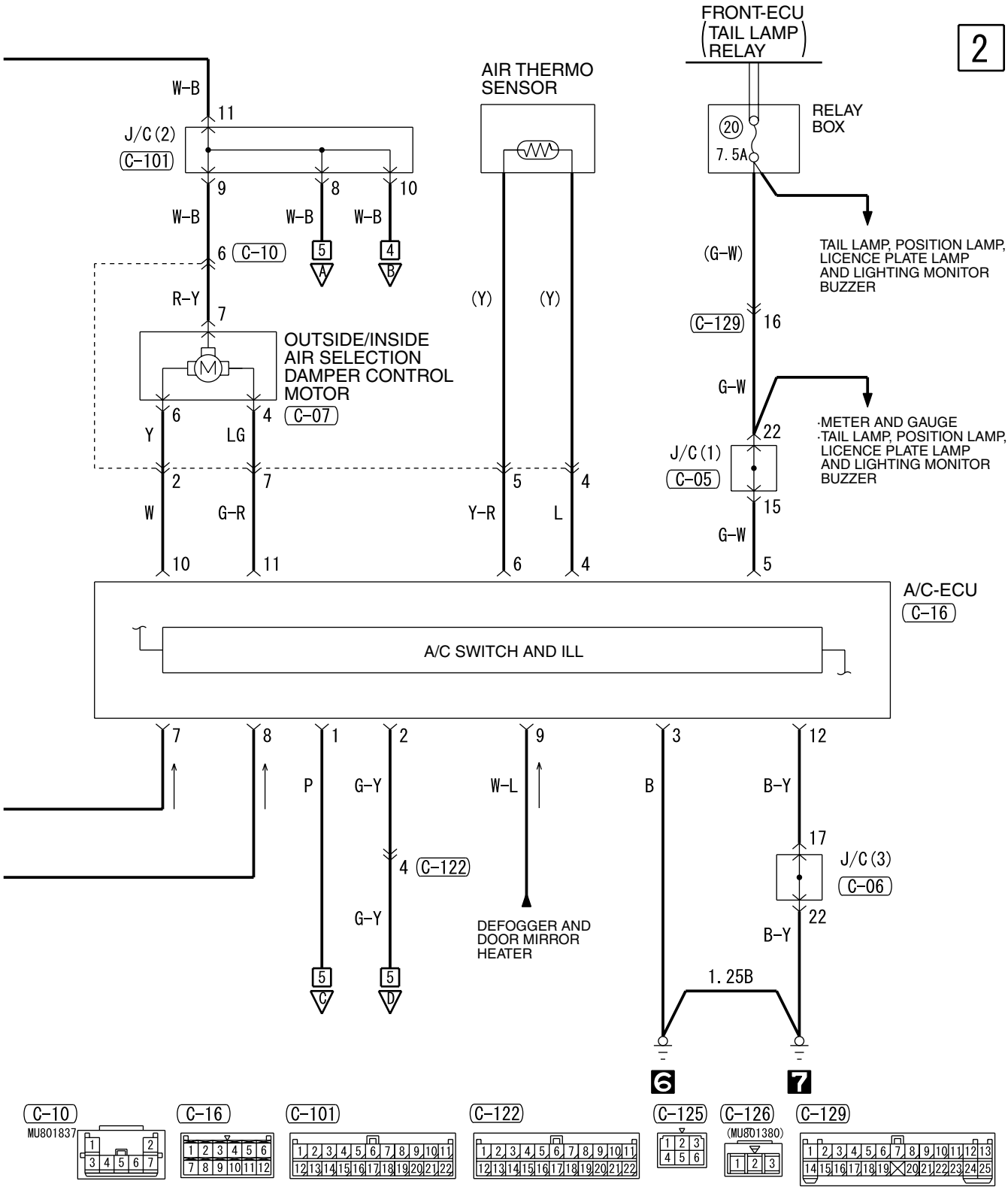

Wire colour code
B : Black LG : Light green G : Green L : Blue W : White Y : Yellow SB : Sky blue
BR : Brown O : Orange GR : Gray R : Red P : Pink V : Violet

H4J12E06AB

MANUAL AIR CONDITIONER <RH drive vehicles> (CONTINUED)

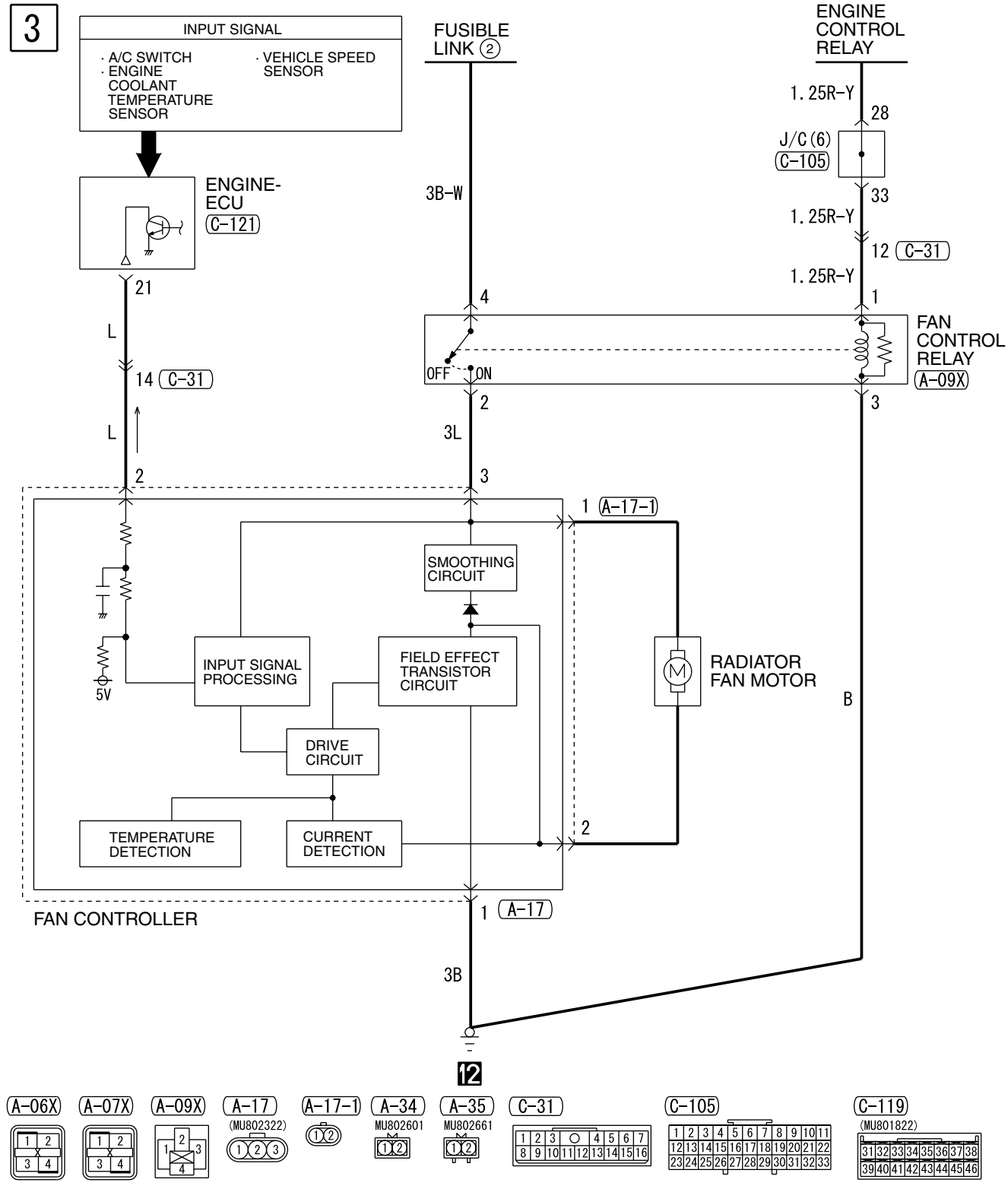

H4J12E06BA

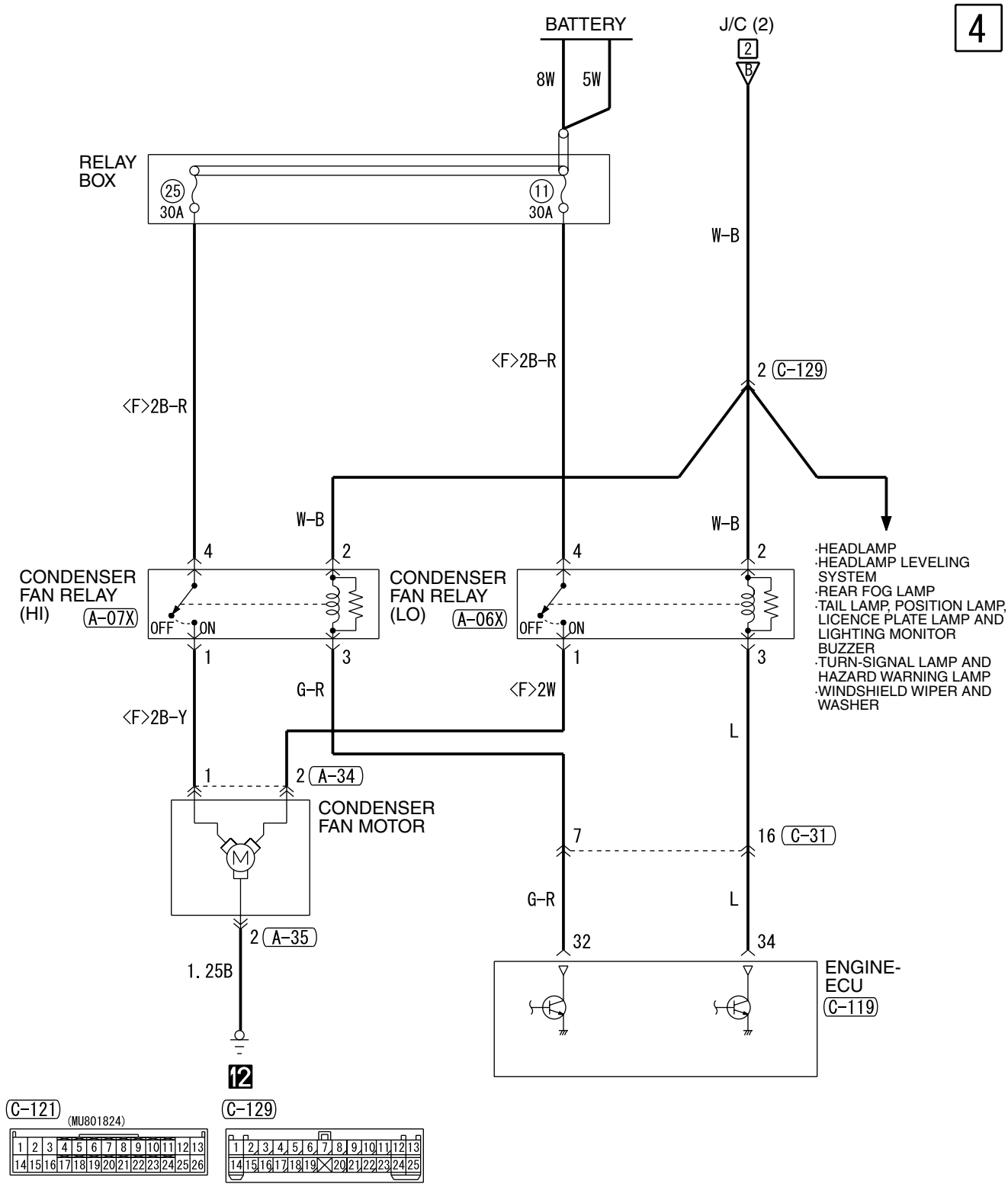

Wire colour code
B : Black LG : Light green G : Green L : Blue W : White Y : Yellow SB : Sky blue
BR : Brown O : Orange GR : Gray R : Red P : Pink V : Violet

H4J12E06BB

MANUAL AIR CONDITIONER <RH drive vehicles> (CONTINUED)

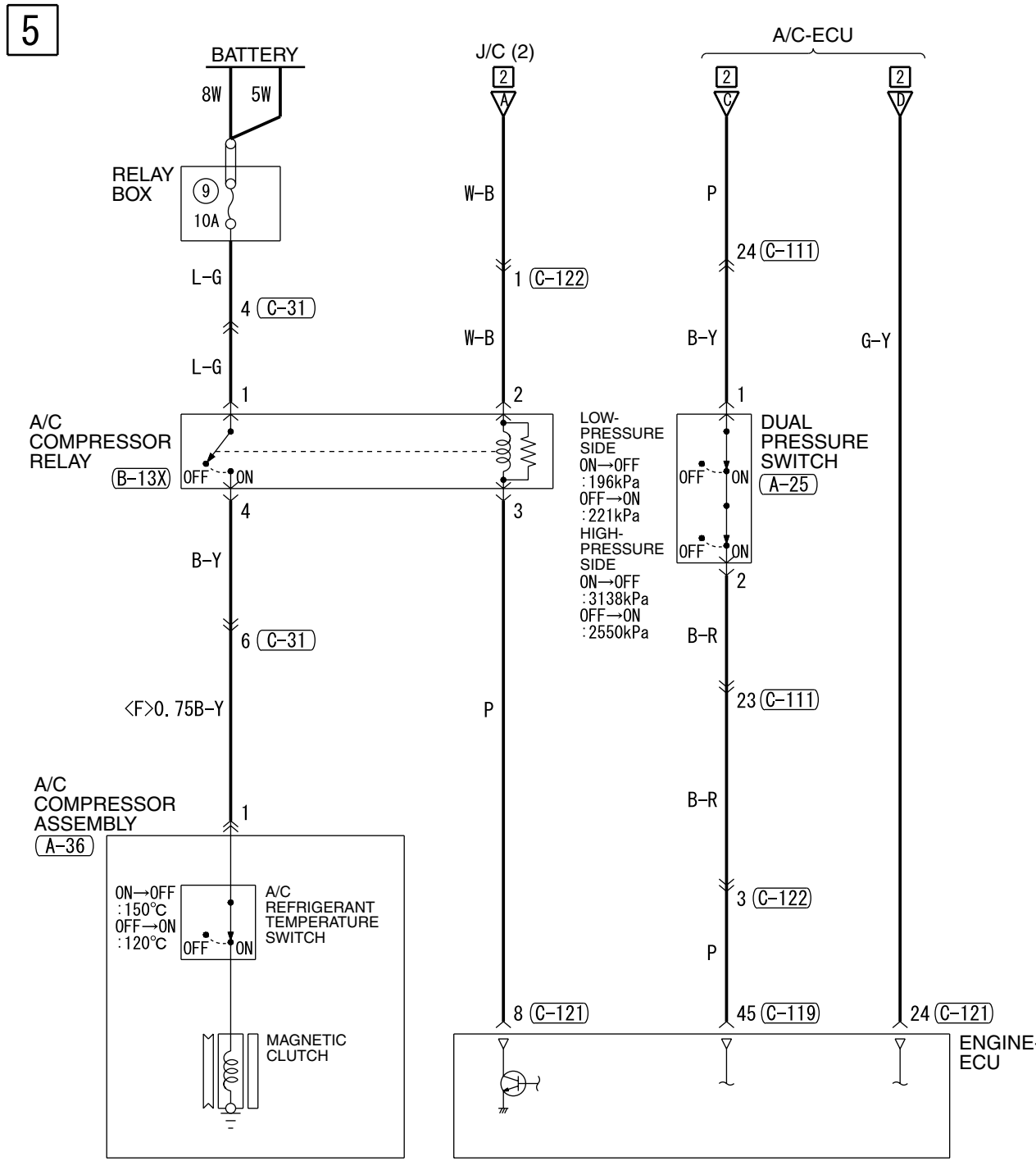

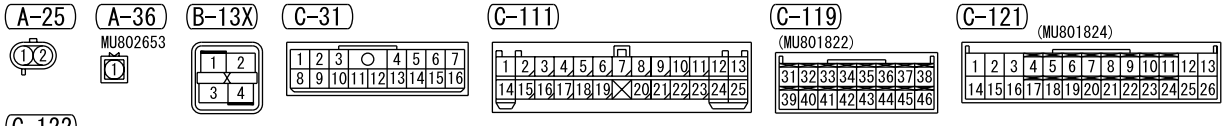

Wire colour code
B : Black LG : Light green G : Green L : Blue
W : White Y : Yellow SB : Sky blue BR : Brown
O : Orange GR : Gray R : Red P : Pink V : Violet

H4J12E06CA

NOTES

WINDSHIELD WIPER AND WASHER

WINDSHIELD WIPER AND WASHER <LH drive vehicles>

M3030006100493

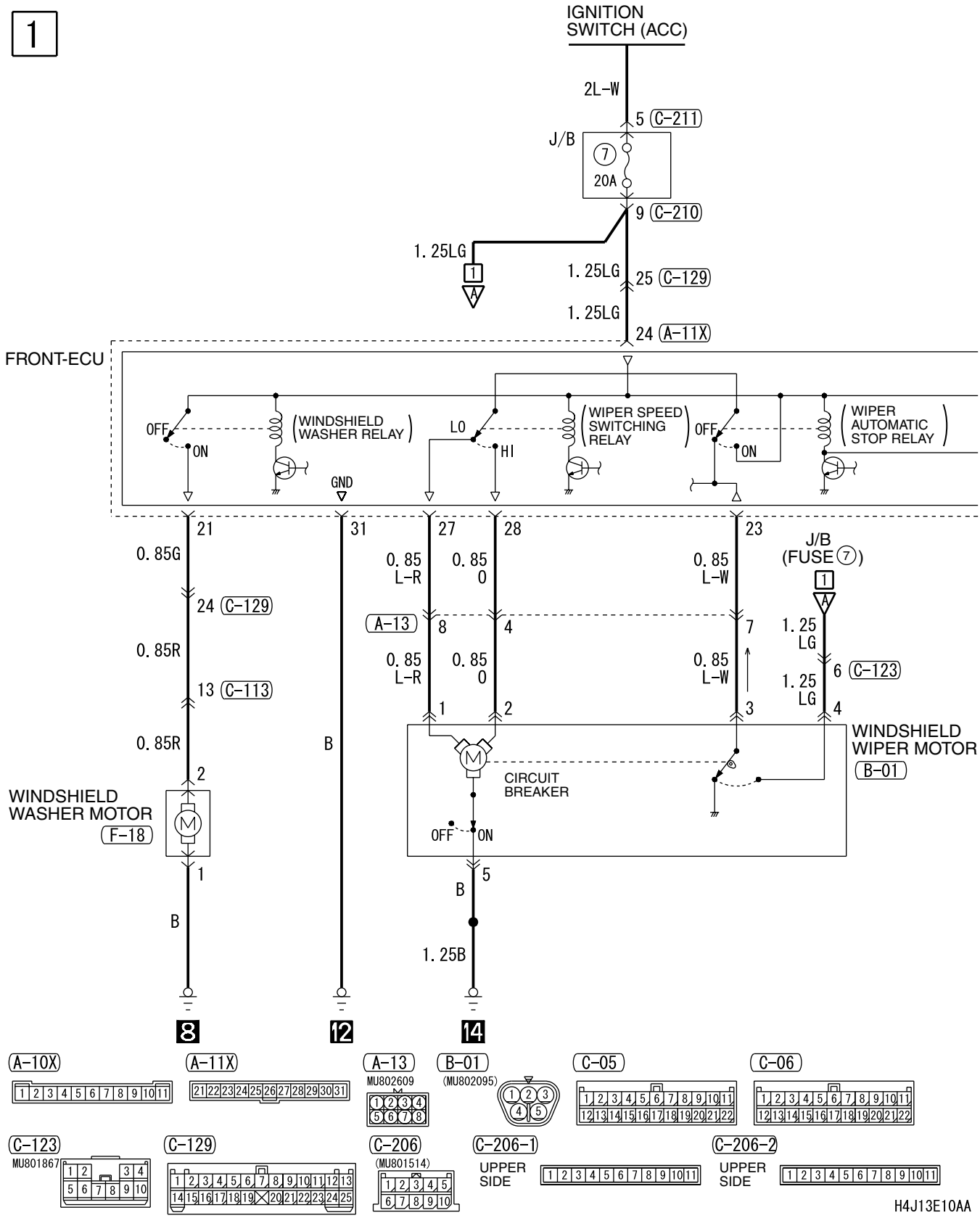

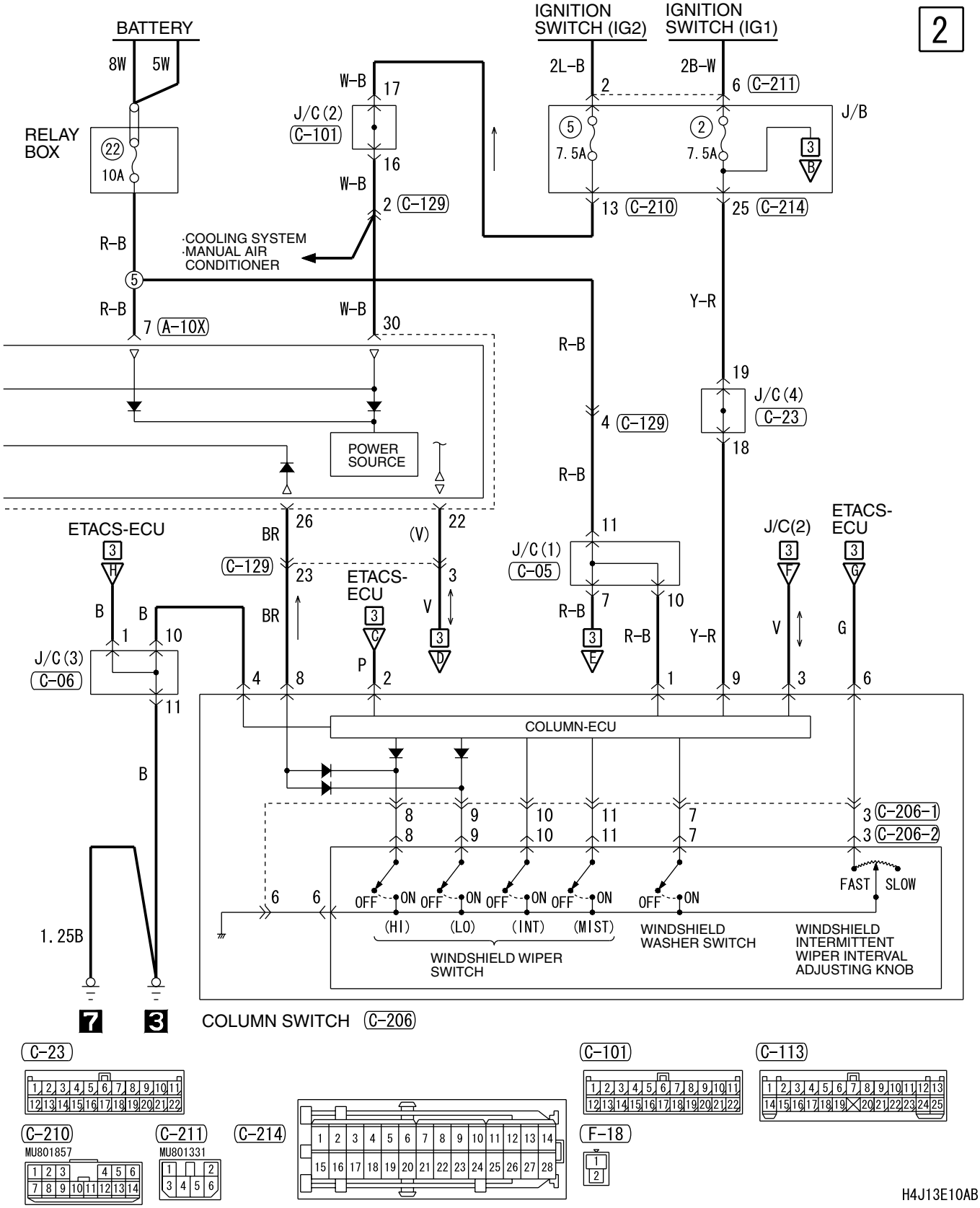
2
BATTERY
8W
5W
RELAY BOX
22
10A
W-B
17
J/C(2)
C-101
16
W-B
2 C-129
·COOLING SYSTEM
·MANUAL AIR CONDITIONER
R-B
5
R-B
7 A-10X
W-B
30
POWER SOURCE
IGNITION SWITCH (IG2)
IGNITION SWITCH (IG1)
2L-B
2B-W
2
6 C-211
J/B
5
7.5A
2
7.5A
3
B
13 C-210
25 C-214
Y-R
R-B
19
J/C(4)
C-23
18
4 C-129
R-B
11
J/C(1)
C-05
7
10
R-B
R-B
Y-R
ETACS-ECU
3
H
B
B
1
10
J/C(3)
C-06
4
11
B
BR
26
C-129
23
BR
8
(V)
22
ETACS-ECU
3
V
3
C
P
2
3
D
J/C(2)
3
F
V
3
ETACS-ECU
3
G
G
6
9
1
3
COLUMN-ECU
8
9
10
11
7
3 C-206-1
8
9
10
11
7
3 C-206-2
6
6
OFF
ON
OFF
ON
OFF
ON
OFF
ON
OFF
ON
FAST
SLOW
(HI)
(LO)
(INT)
(MIST)
WINDSHIELD WIPER SWITCH
WINDSHIELD WASHER SWITCH
WINDSHIELD INTERMITTENT WIPER INTERVAL ADJUSTING KNOB
1.25B
7
3
COLUMN SWITCH C-206
C-23
C-210
MU801857
C-211
MU801331
C-214
C-101
C-113
F-18
H4J13E10AB

WINDSHIELD WIPER AND WASHER <LH drive vehicles> (CONTINUED)

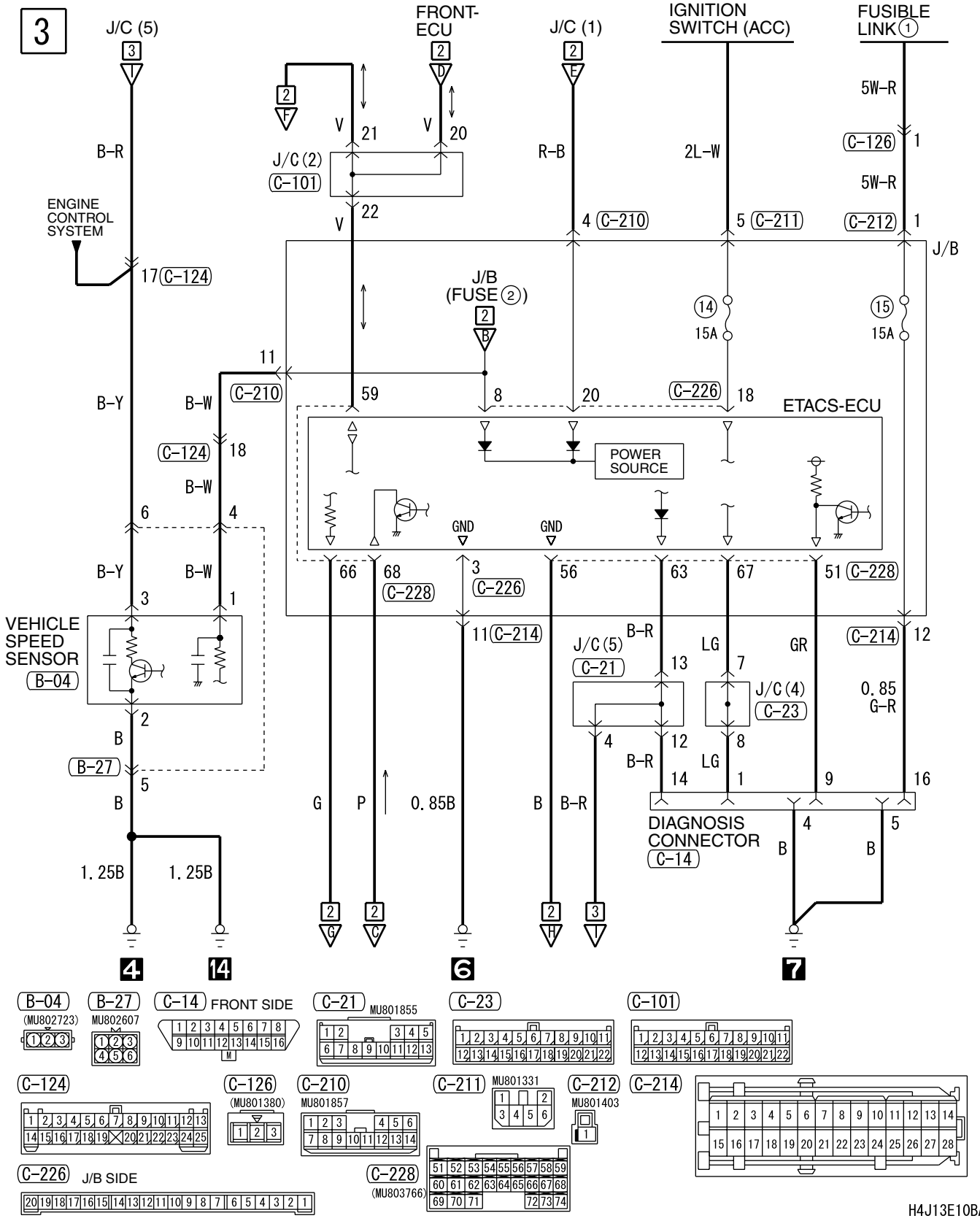

NOTES

WINDSHIELD WIPER AND WASHER <RH drive vehicles>

M3030006100501

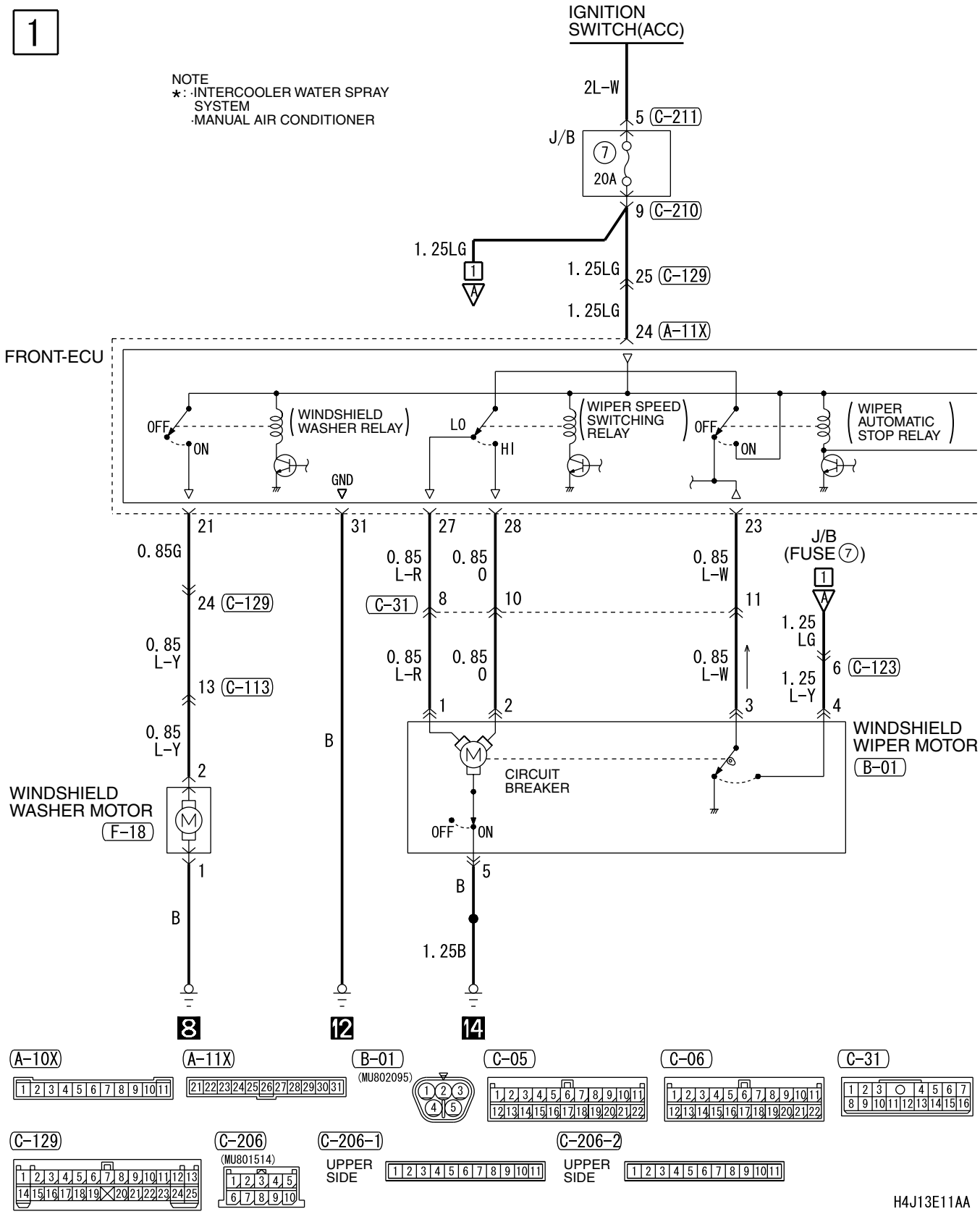

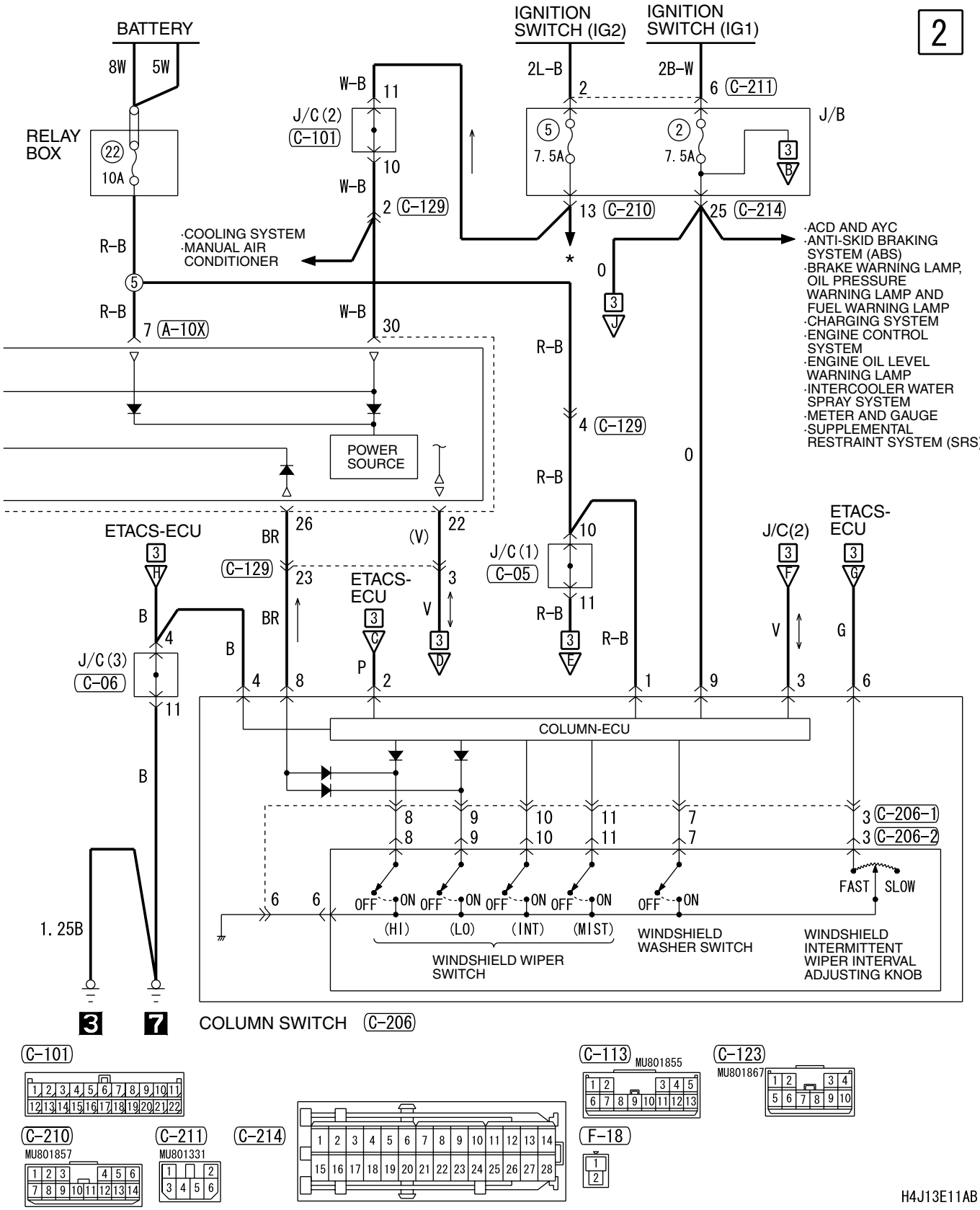
2
BATTERY
8W
5W
RELAY BOX
22
10A
R-B
5
R-B
7 A-10X
W-B
11
J/C(2)
C-101
10
W-B
2 C-129
·COOLING SYSTEM
·MANUAL AIR CONDITIONER
W-B
30
POWER SOURCE
IGNITION SWITCH (IG2)
IGNITION SWITCH (IG1)
2L-B
2
2B-W
6 C-211
J/B
5
7.5A
2
7.5A
3
B
13 C-210
25 C-214
*
0
3
J
·ACD AND AYC
·ANTI-SKID BRAKING SYSTEM (ABS)
·BRAKE WARNING LAMP, OIL PRESSURE WARNING LAMP AND FUEL WARNING LAMP
·CHARGING SYSTEM
·ENGINE CONTROL SYSTEM
·ENGINE OIL LEVEL WARNING LAMP
·INTERCOOLER WATER SPRAY SYSTEM
·METER AND GAUGE
·SUPPLEMENTAL RESTRAINT SYSTEM (SRS)
R-B
4 C-129
R-B
0
ETACS-ECU
3
H
26
BR
C-129
23
BR
22
(V)
3
V
ETACS-ECU
3
C
3
D
P
10
J/C(1)
C-05
11
R-B
3
E
R-B
J/C(2)
3
F
V
ETACS-ECU
3
G
G
B
4
J/C(3)
C-06
11
B
4
8
2
1
9
3
6
COLUMN-ECU
8
8
9
9
10
10
11
11
7
7
3 C-206-1
3 C-206-2
FAST
SLOW
6
6
OFF
ON
(HI)
(LO)
(INT)
(MIST)
WINDSHIELD WIPER SWITCH
WINDSHIELD WASHER SWITCH
WINDSHIELD INTERMITTENT WIPER INTERVAL ADJUSTING KNOB
1.25B
3
7
COLUMN SWITCH C-206
C-101
C-210
MU801857
C-211
MU801331
C-214
C-113
MU801855
C-123
MU801867
F-18
H4J13E11AB

WINDSHIELD WIPER AND WASHER <RH drive vehicles> (CONTINUED)

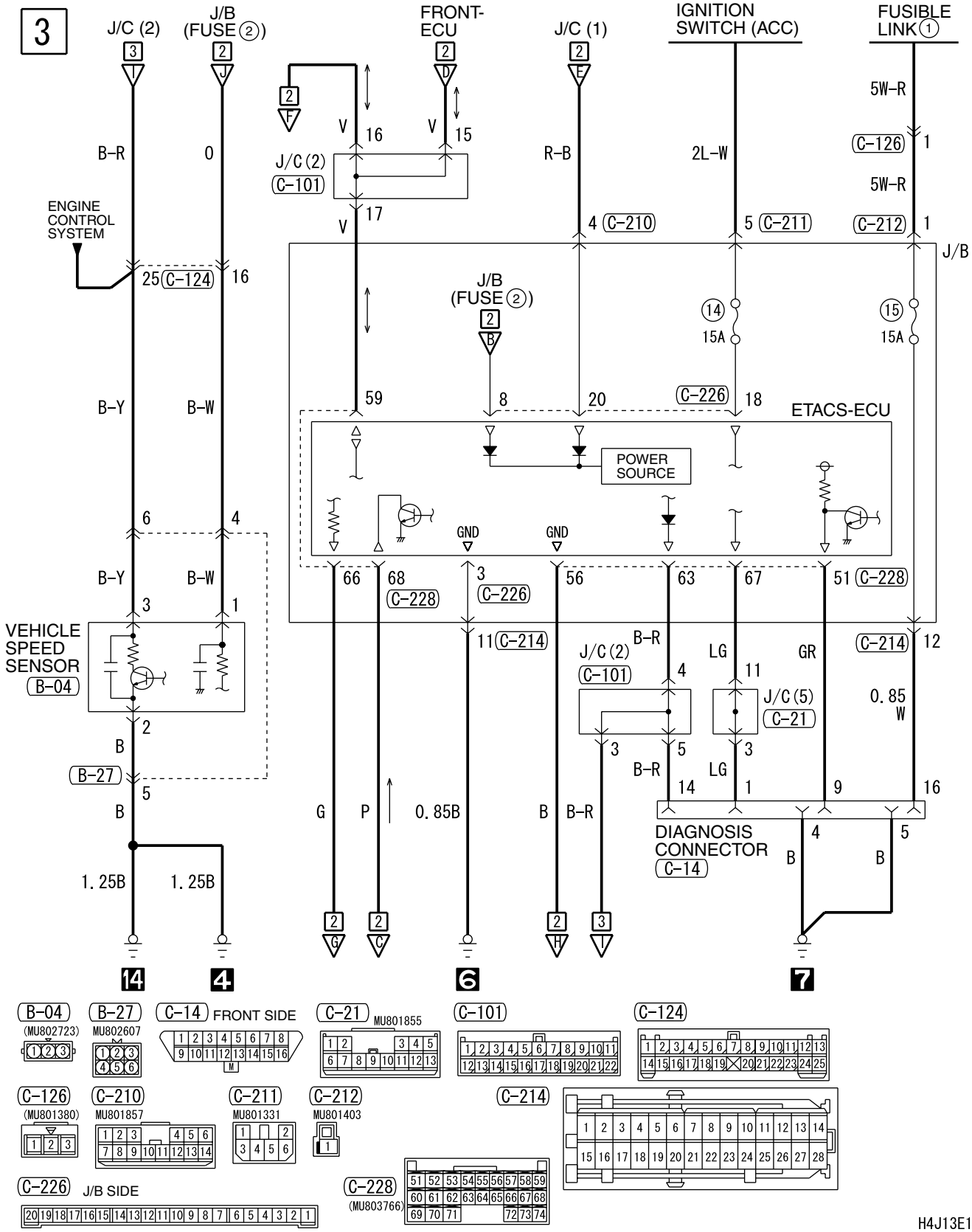

NOTES

REMOTE CONTROLLED MIRROR

REMOTE CONTROLLED MIRROR <LH drive vehicles>

M3030006500178

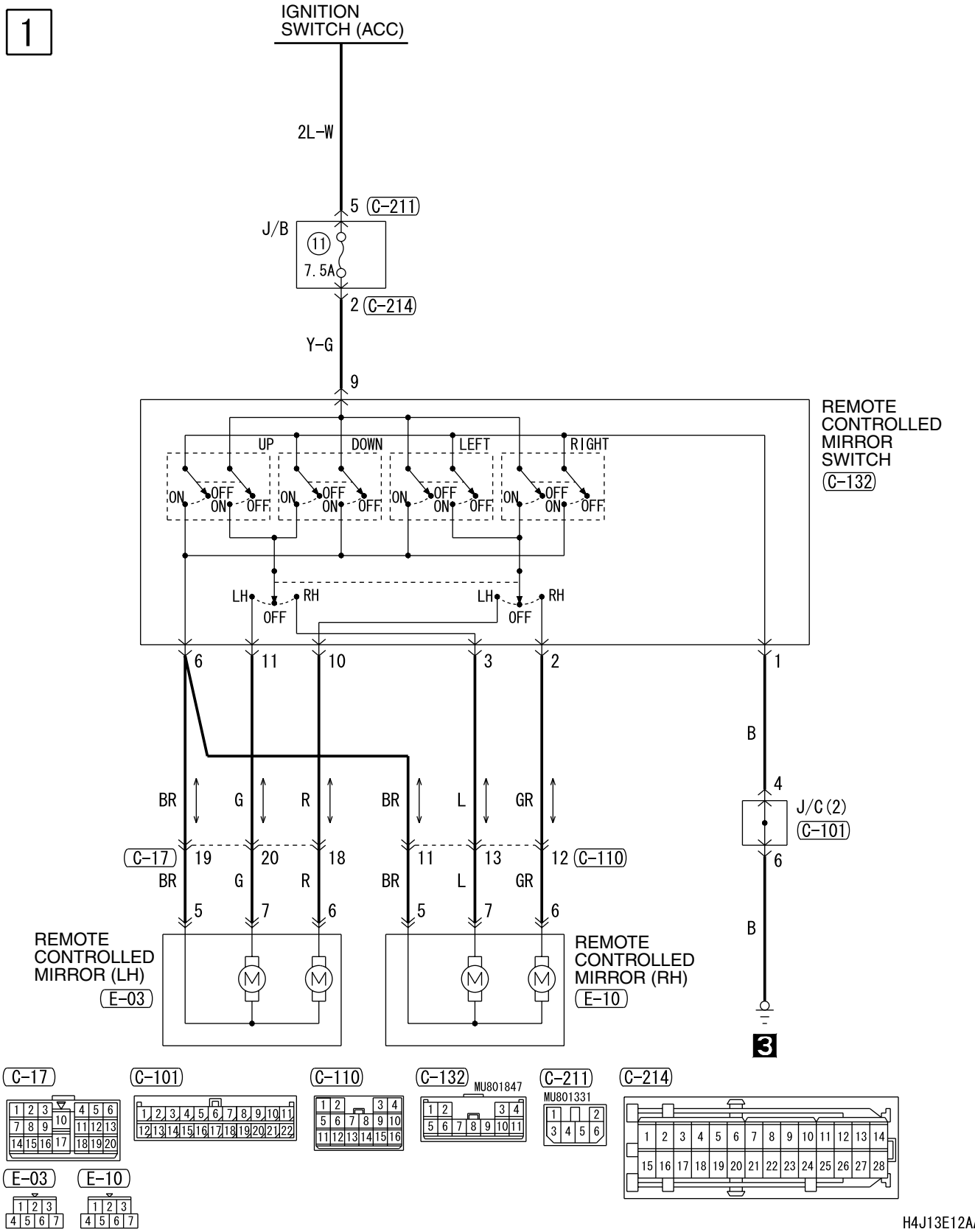

H4J13E12AA

REMOTE CONTROLLED MIRROR <RH drive vehicles>

M3030006500189

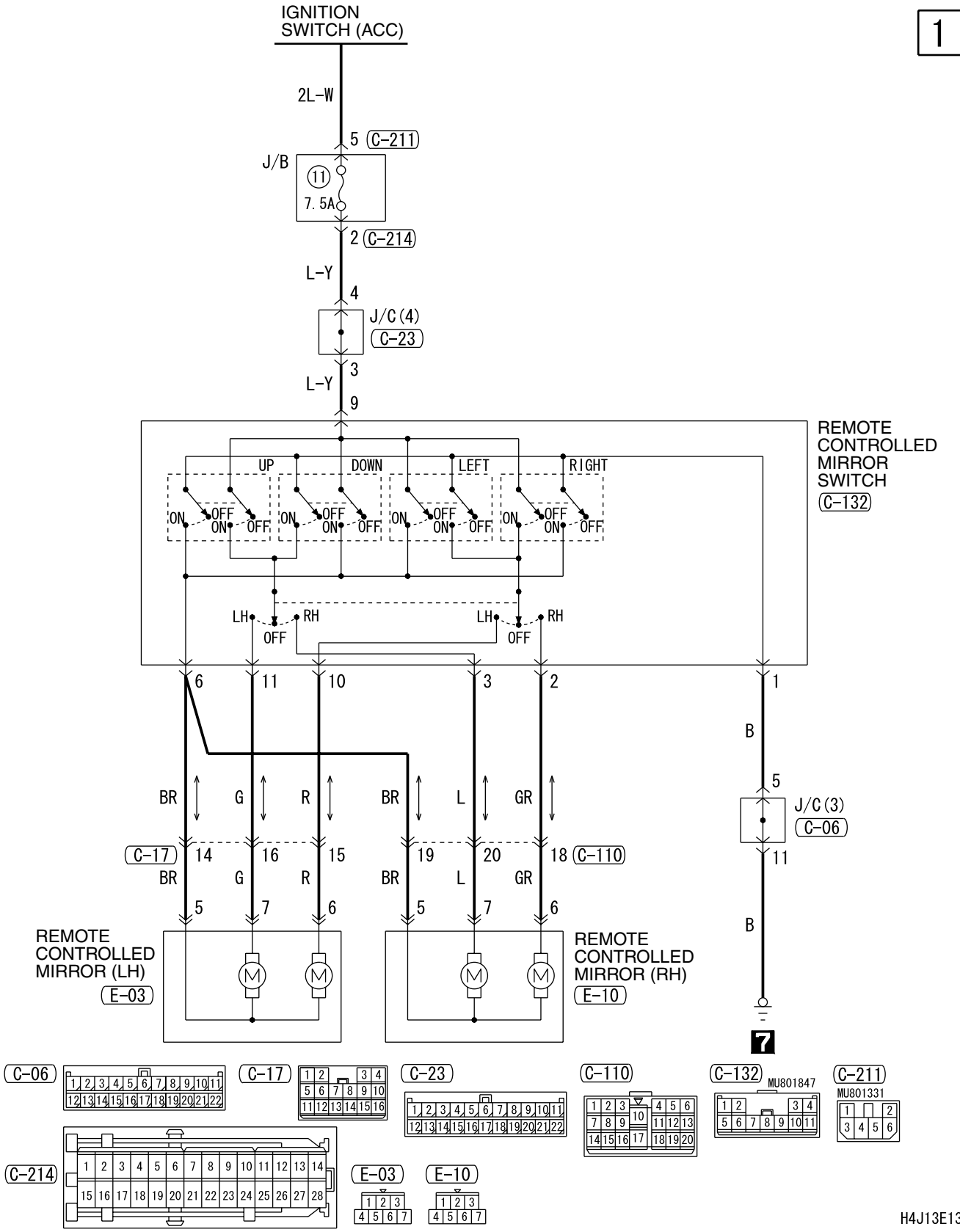

DEFOGGER AND DOOR MIRROR HEATER

DEFOGGER AND DOOR MIRROR HEATER <LH drive vehicles>

M3030013500028

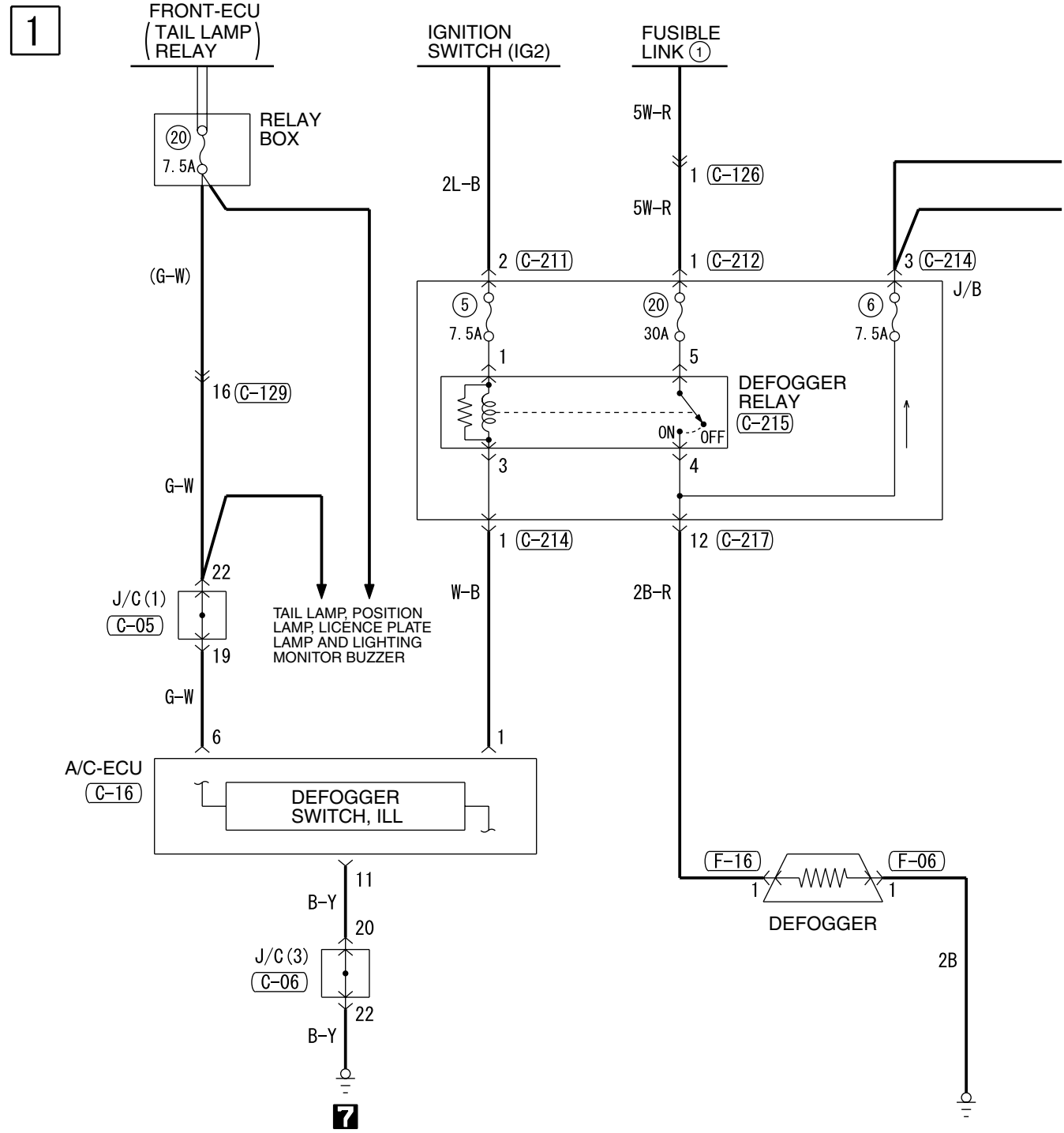

H4J13E14AA

2

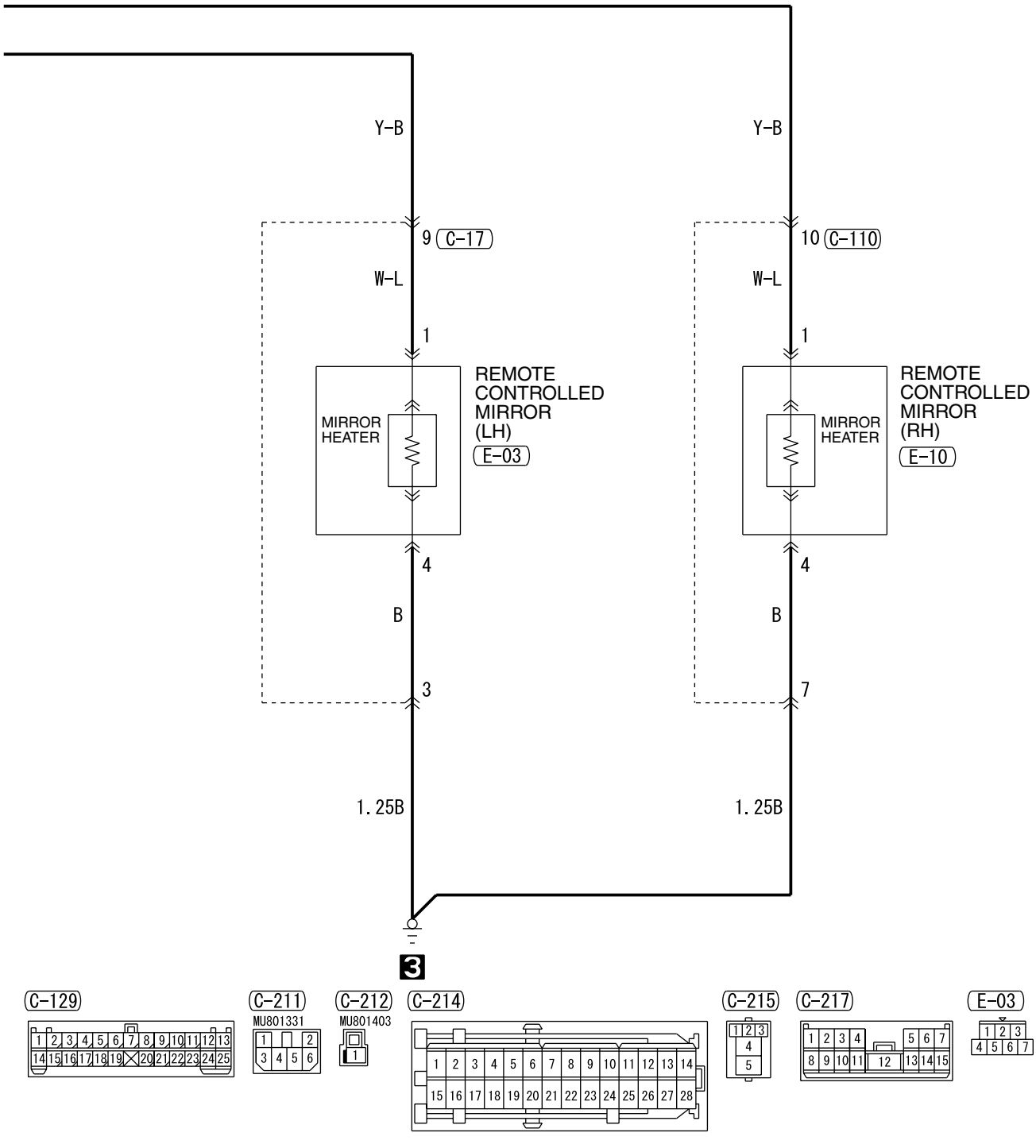

H4J13E14AB

DEFOGGER AND DOOR MIRROR HEATER <RH drive vehicles>

M3030013500039

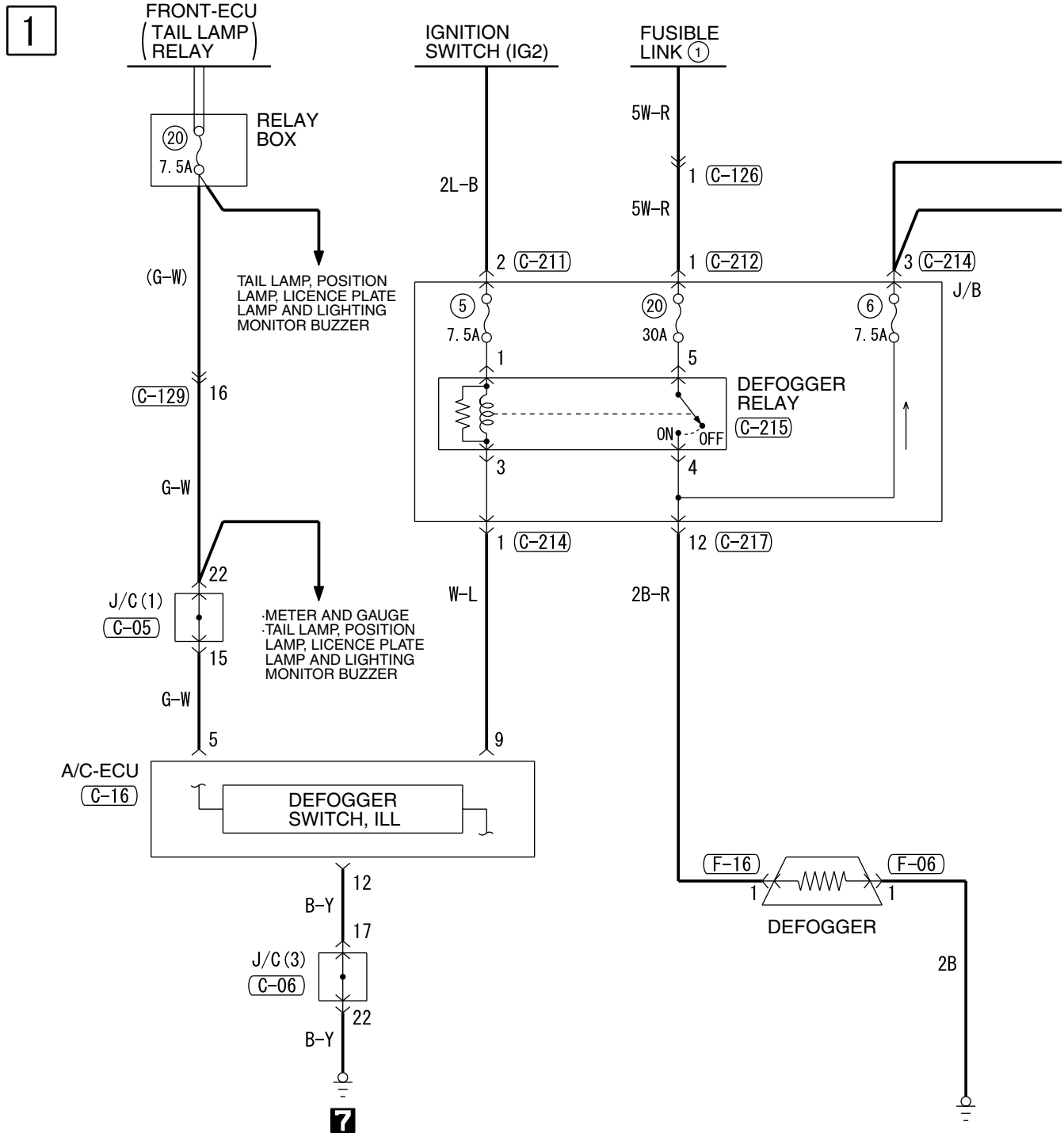

H4J13E15AA

2

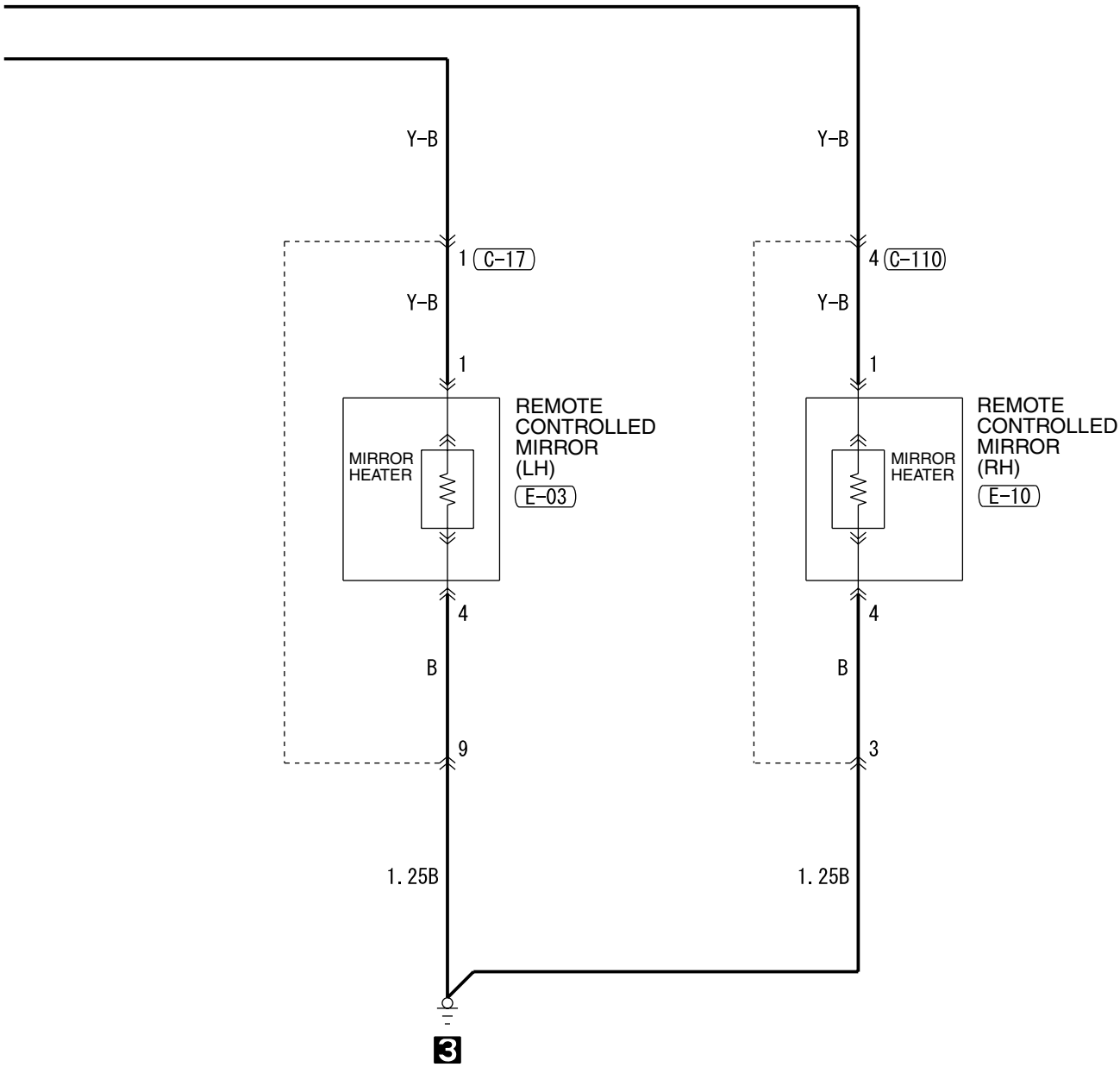

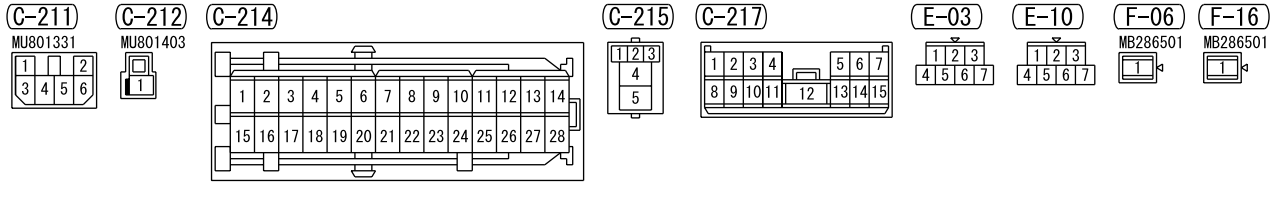

H4J13E15AB

SPARE CONNECTOR (FOR AUDIO)

SPARE CONNECTOR (FOR AUDIO) <LH drive vehicles>

M3030007600220

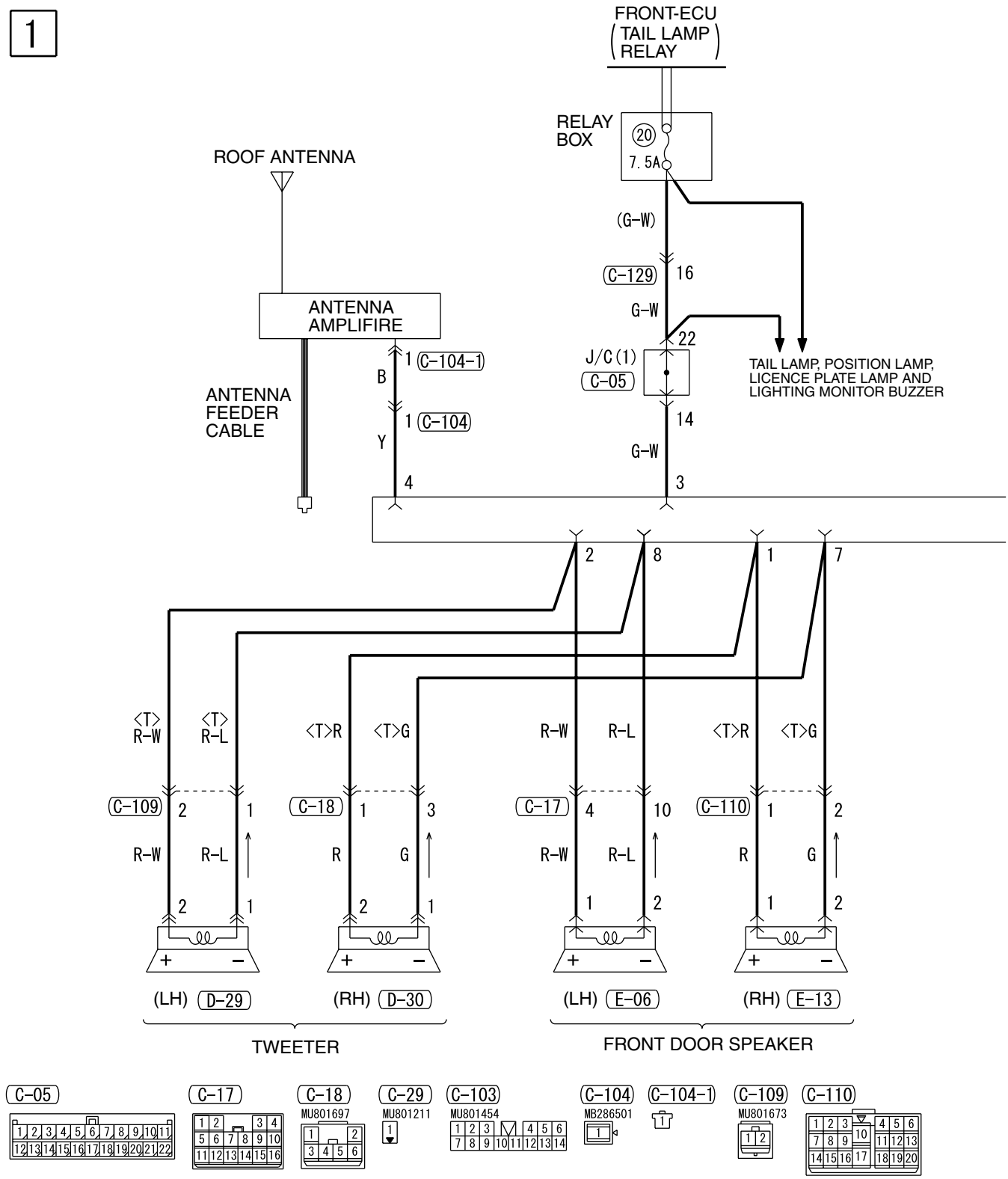

H4J14E06AA

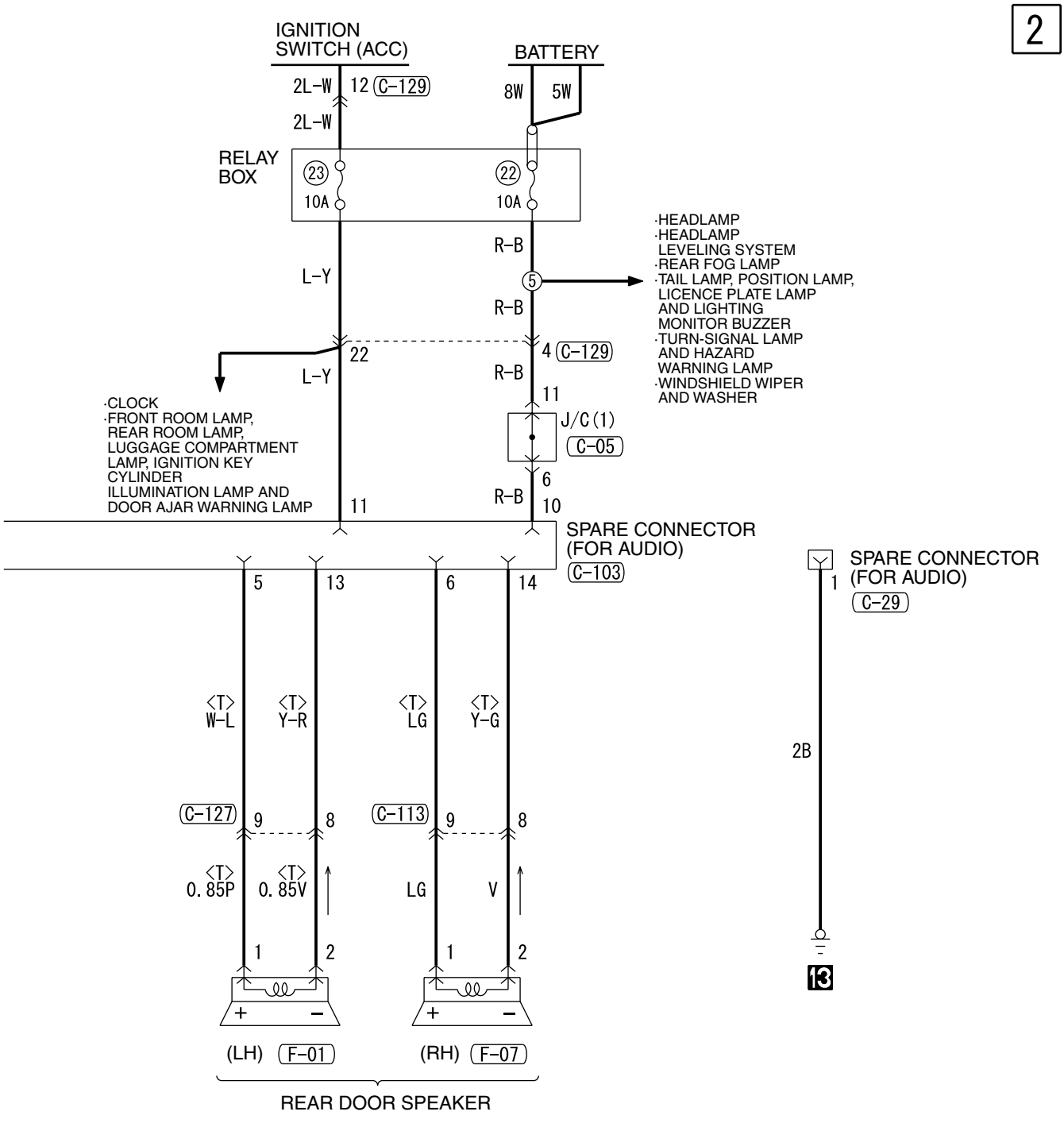

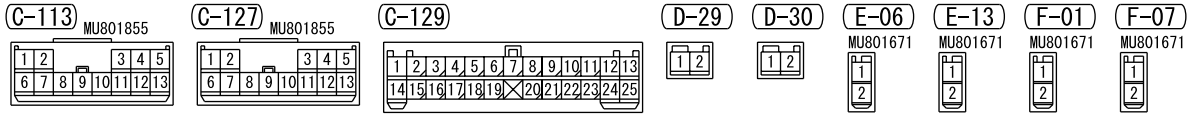

Wire colour code
B : Black LG : Light green G : Green L : Blue W : White Y : Yellow SB : Sky blue
BR : Brown O : Orange GR : Gray R : Red P : Pink V : Violet

H4J14E06AB

SPARE CONNECTOR (FOR AUDIO) <RH drive vehicles>

M3030007600231

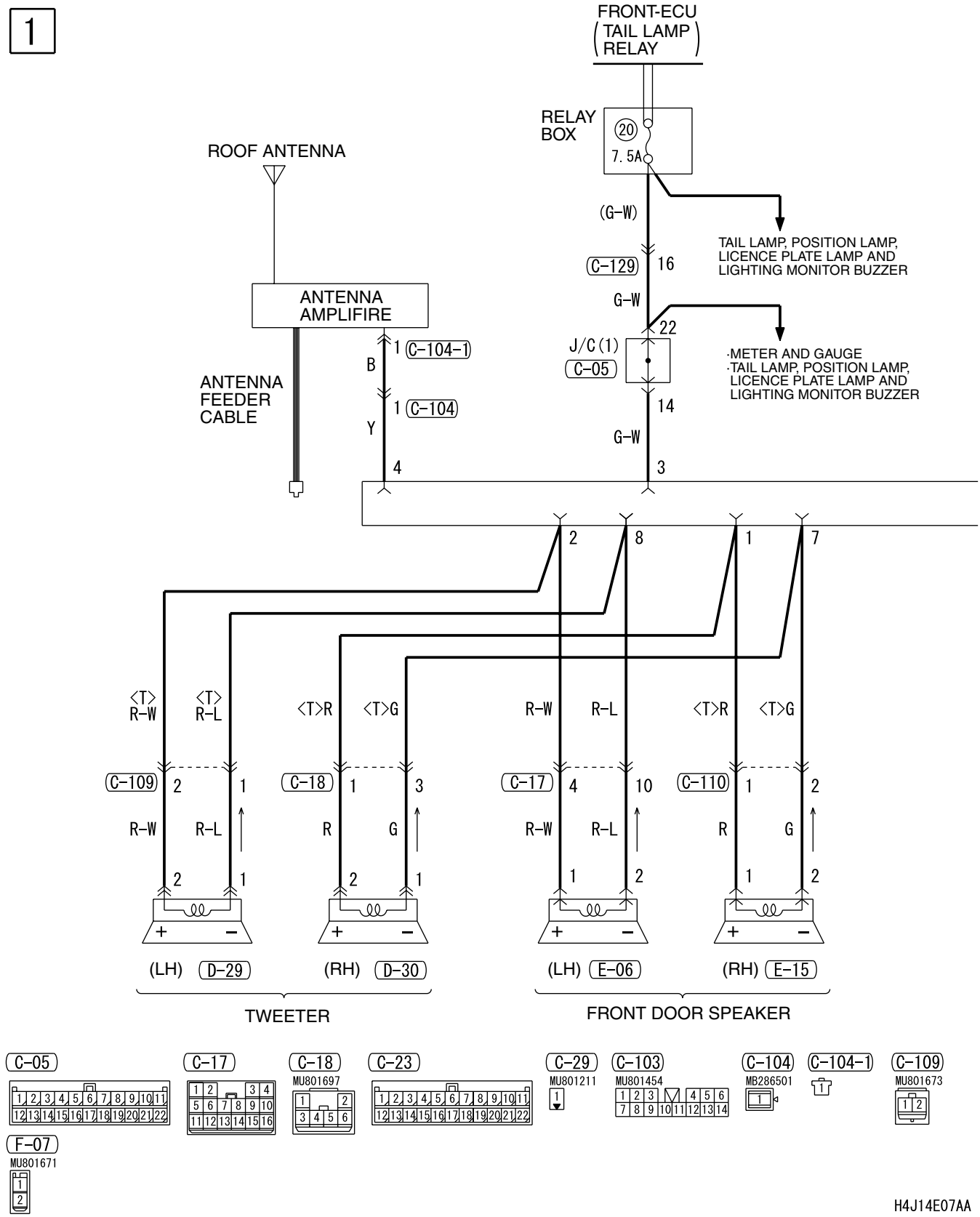

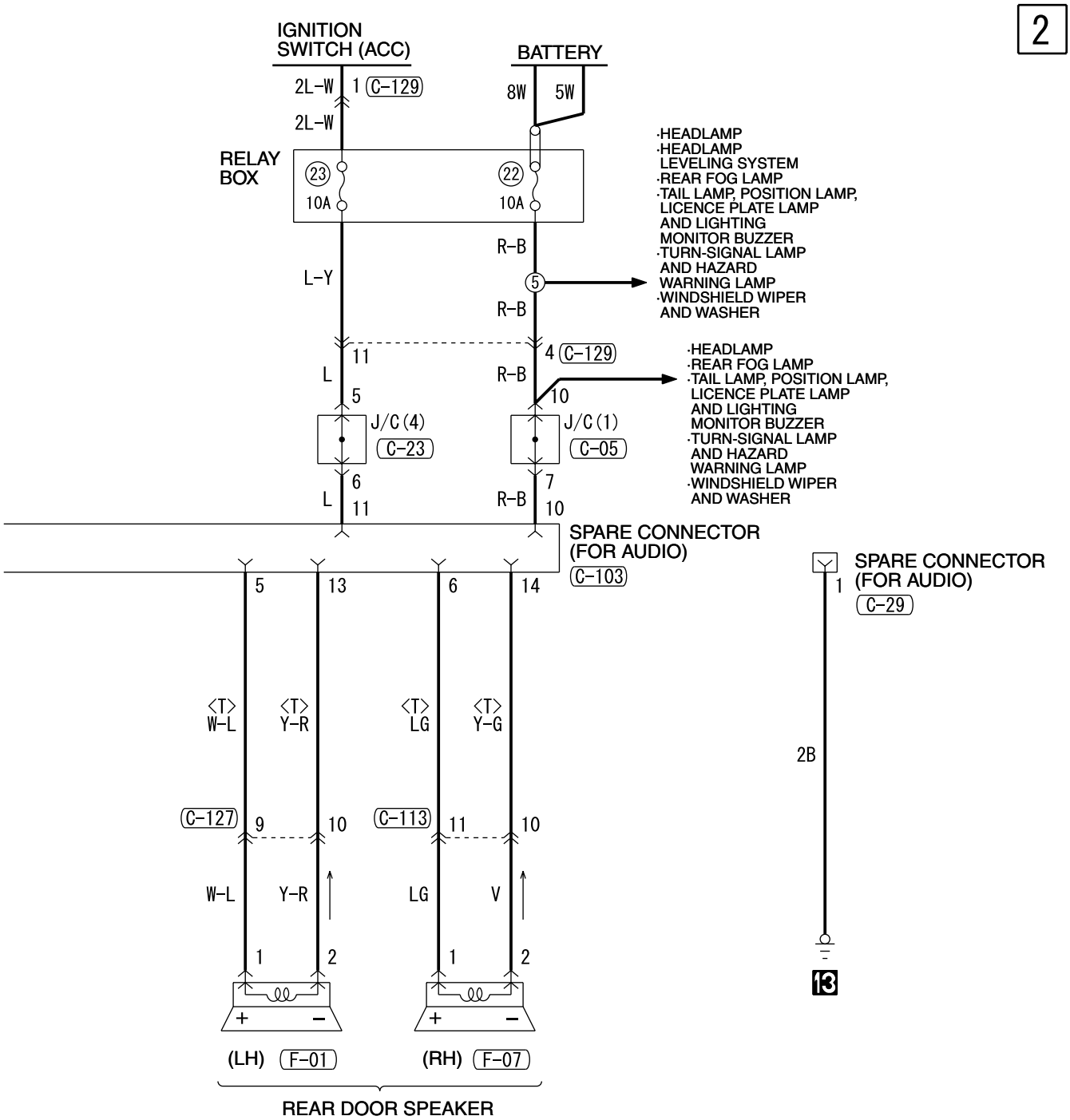

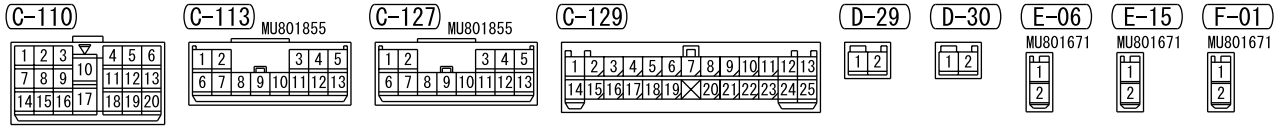

Wire colour code
B : Black LG : Light green G : Green L : Blue W : White Y : Yellow SB : Sky blue
BR : Brown O : Orange GR : Gray R : Red P : Pink V : Violet

H4J14E07AB

CIGARETTE LIGHTER

CIGARETTE LIGHTER <LH drive vehicles>

M3030007800279

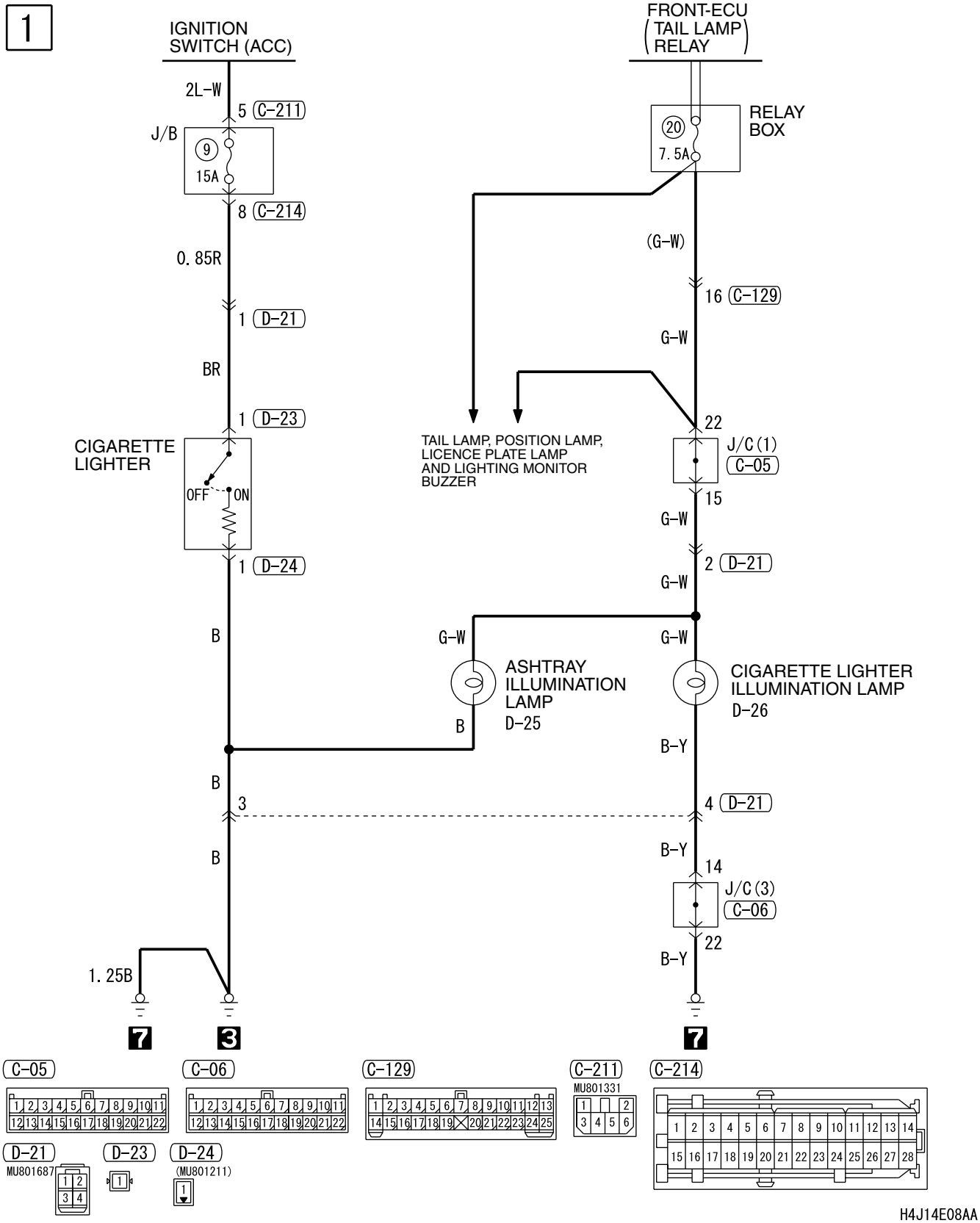

H4J14E08AA

CIGARETTE LIGHTER <RH drive vehicles>

M3030007800280

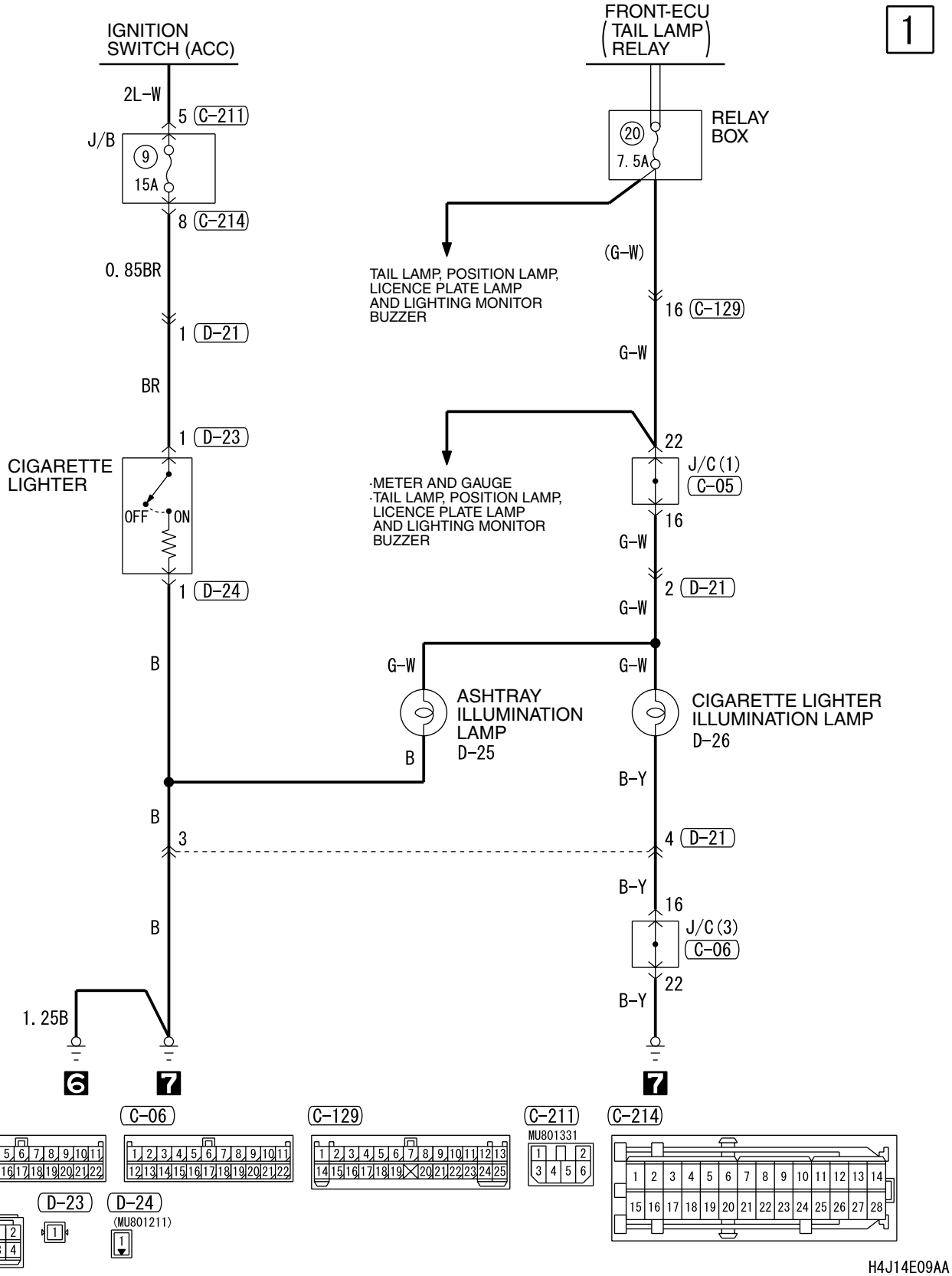

H4J14E09AA

CLOCK

CLOCK <LH drive vehicles>

M3030007700294

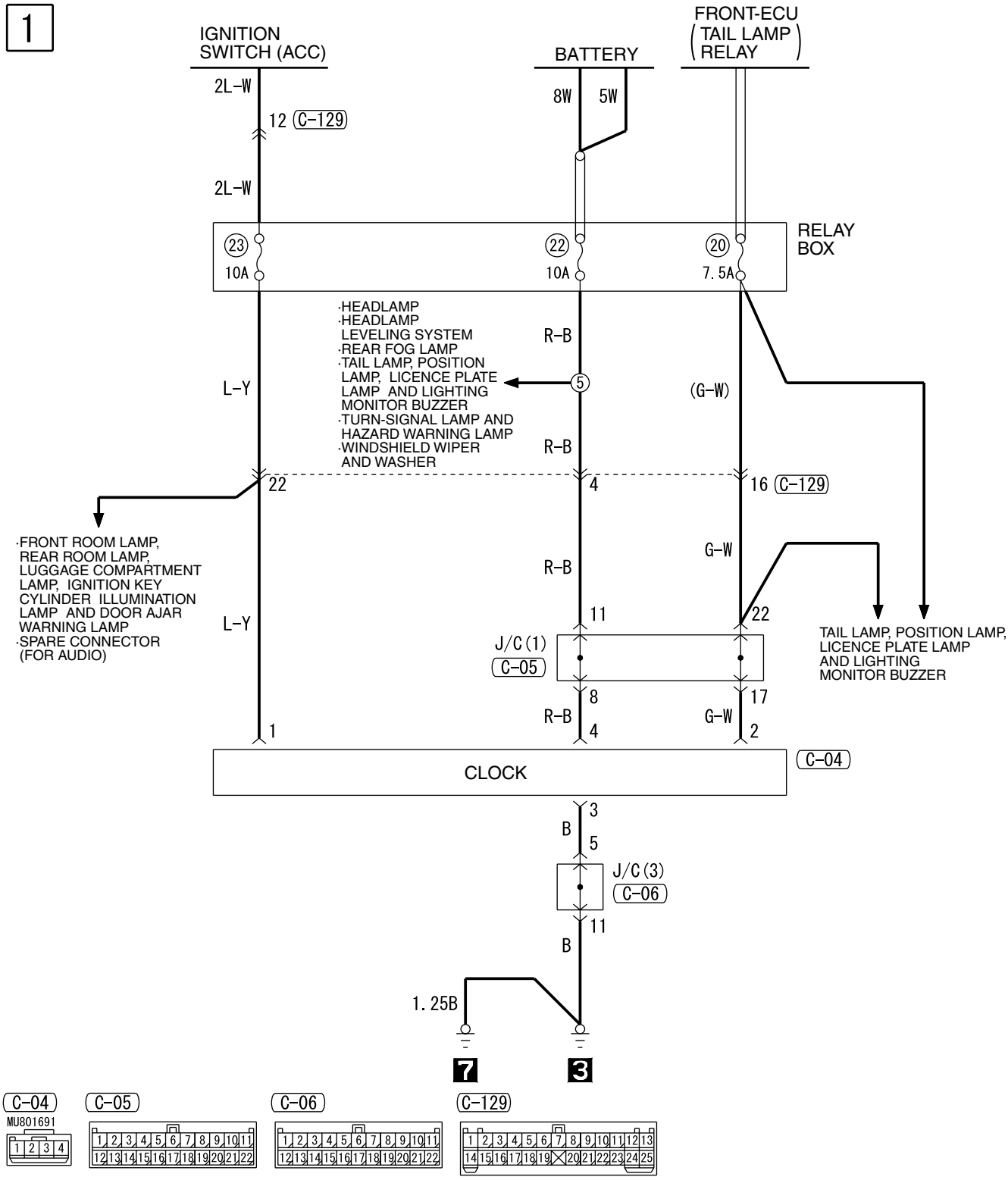

Wire colour code
B : Black LG : Light green G : Green L : Blue W : White Y : Yellow SB : Sky blue
BR : Brown O : Orange GR : Gray R : Red P : Pink V : Violet

H4J14E10AA

CLOCK <RH drive vehicles>

M3030007700302

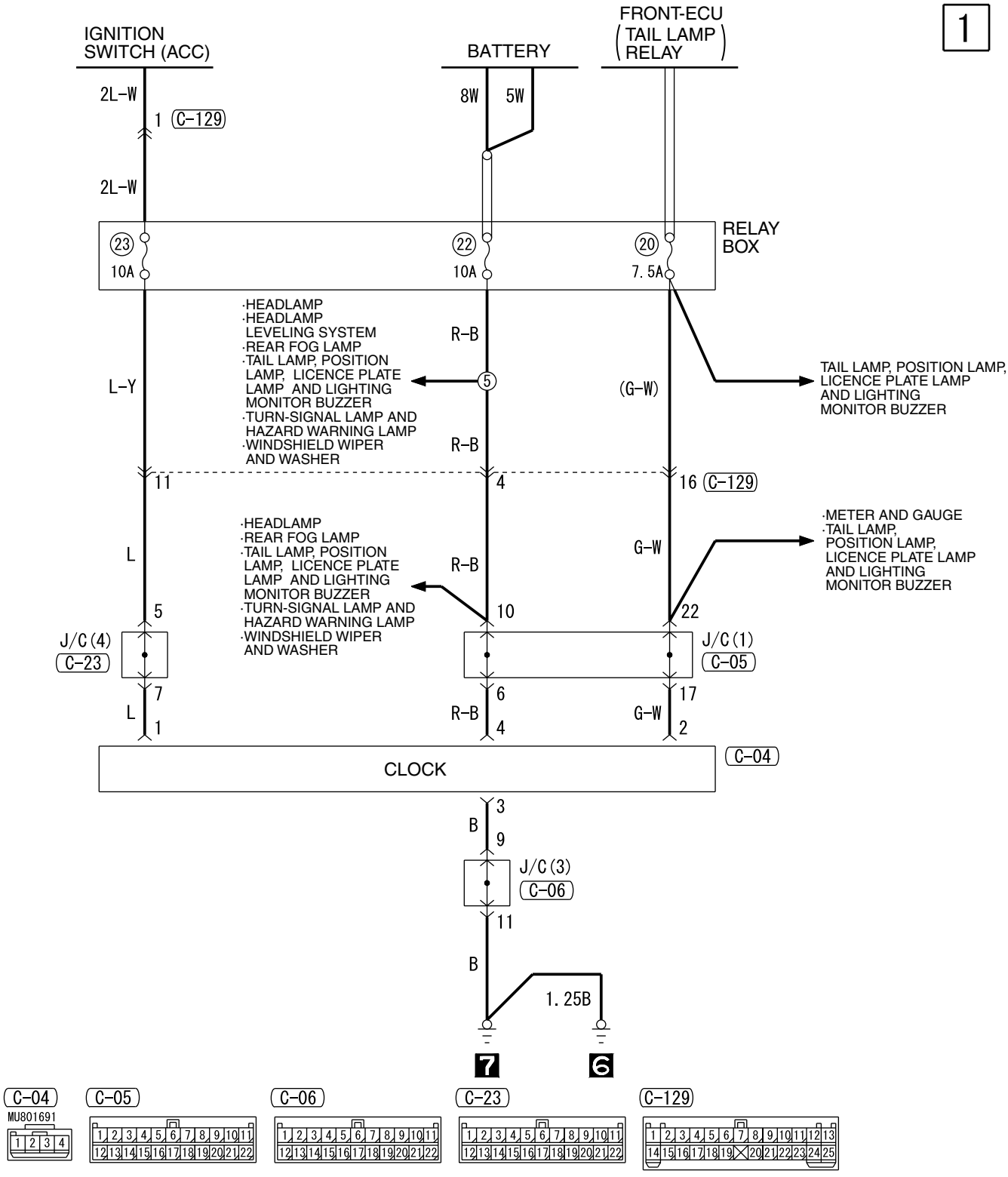

Wire colour code
B : Black LG : Light green G : Green L : Blue W : White Y : Yellow SB : Sky blue
BR : Brown O : Orange GR : Gray R : Red P : Pink V : Violet

H4J14E11AA

ANTI-SKID BRAKING SYSTEM (ABS)

ANTI-SKID BRAKING SYSTEM (ABS) <LH drive vehicles>

M3030008400520

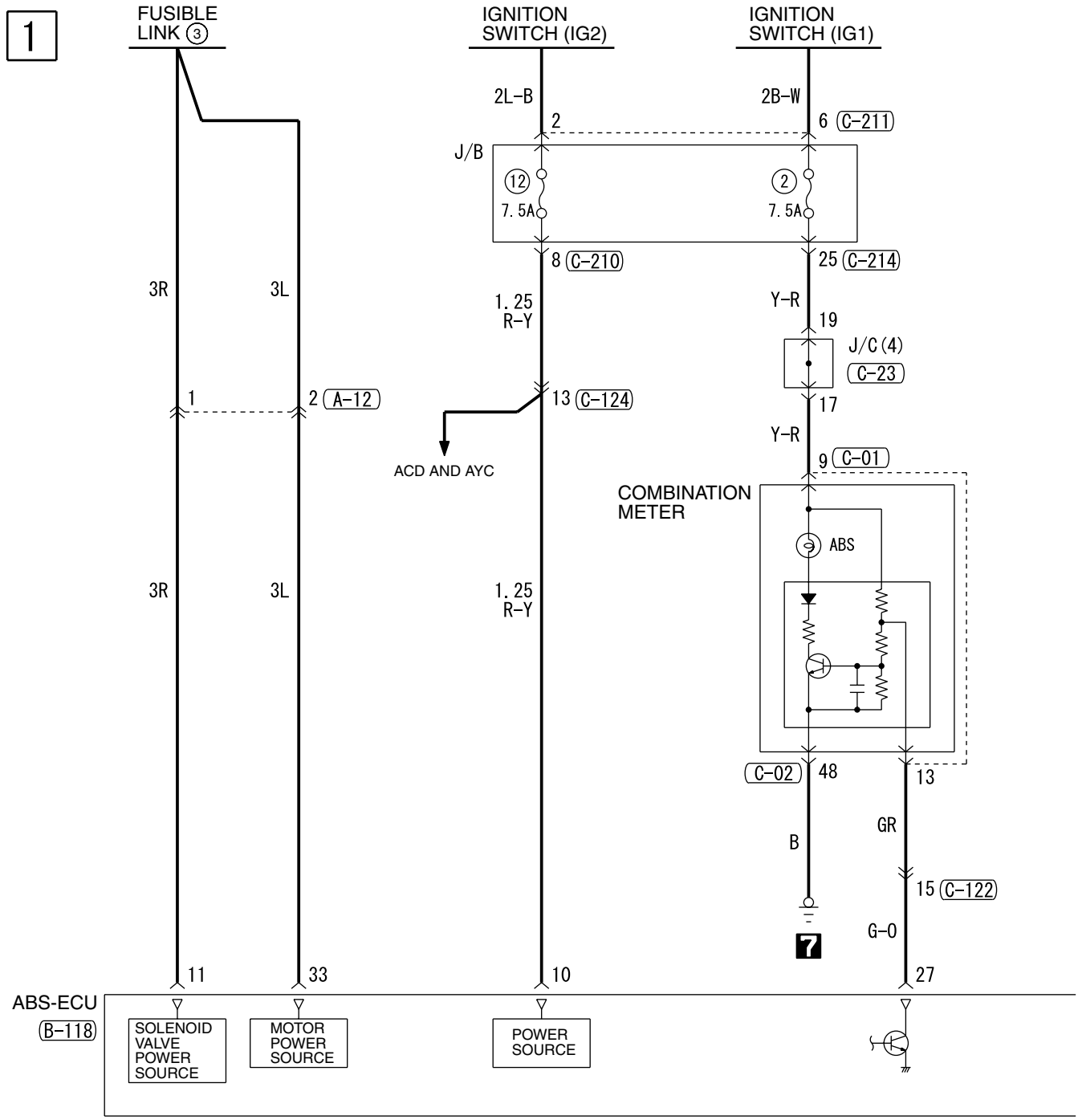

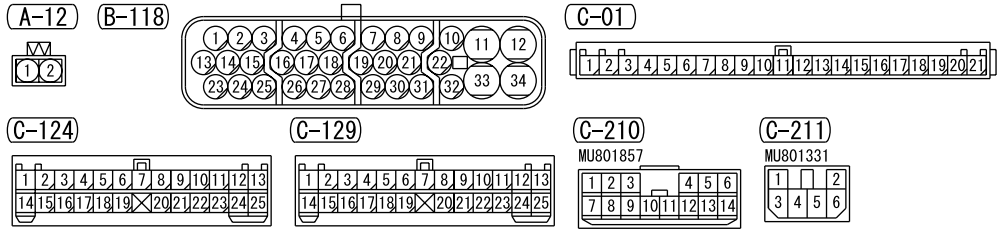

H4J15E13AA

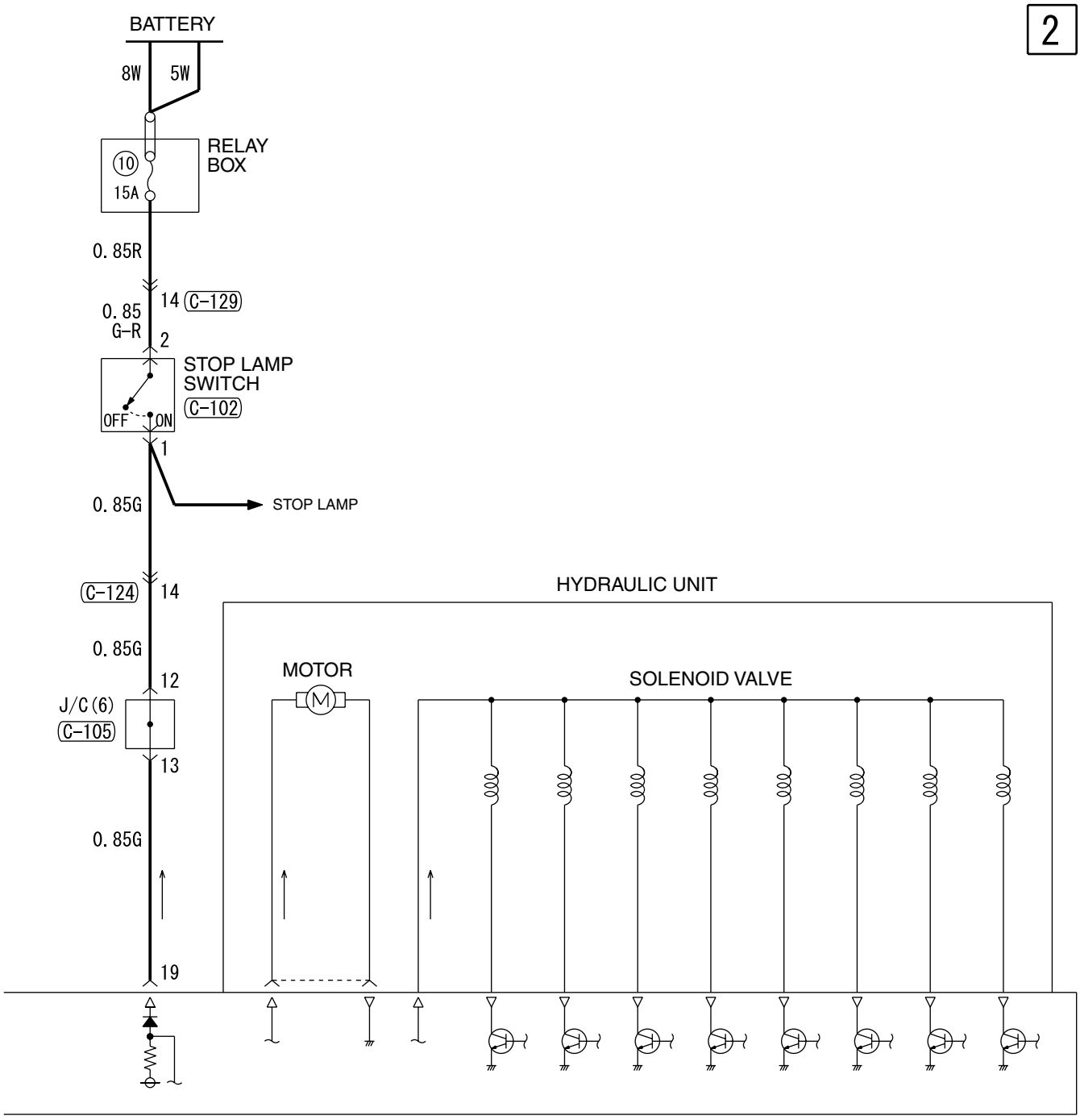

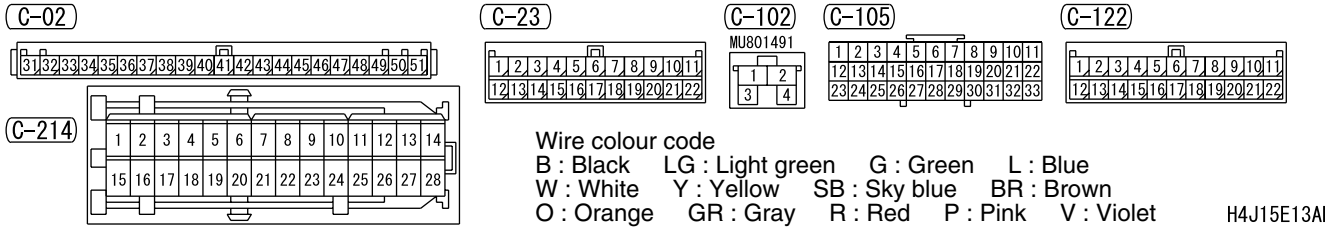

Wire colour code
B : Black LG : Light green G : Green L : Blue
W : White Y : Yellow SB : Sky blue BR : Brown
O : Orange GR : Gray R : Red P : Pink V : Violet

H4J15E13AB

ANTI-SKID BRAKING SYSTEM (ABS) <LH drive vehicles> (CONTINUED)

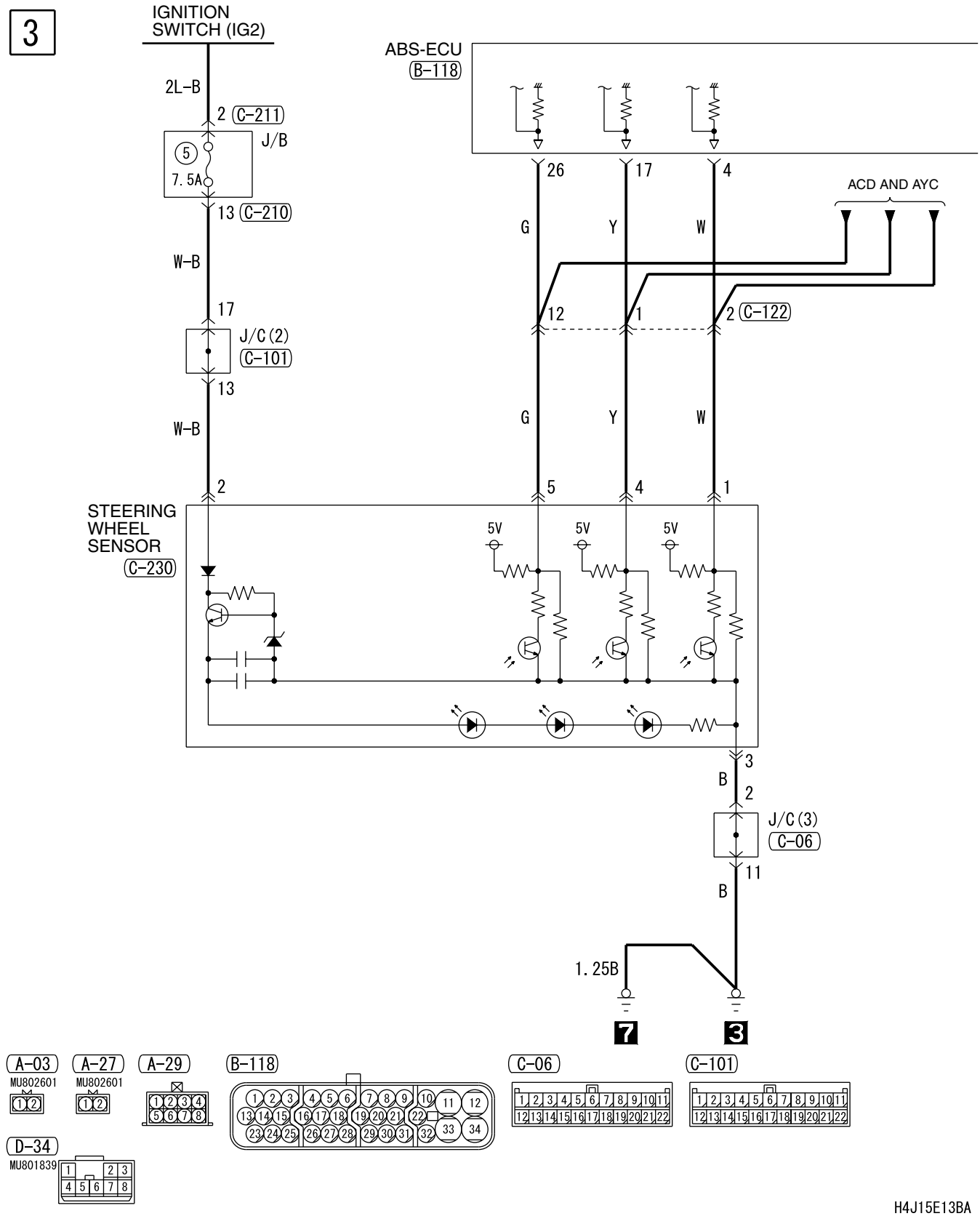

H4J15E13BA

4

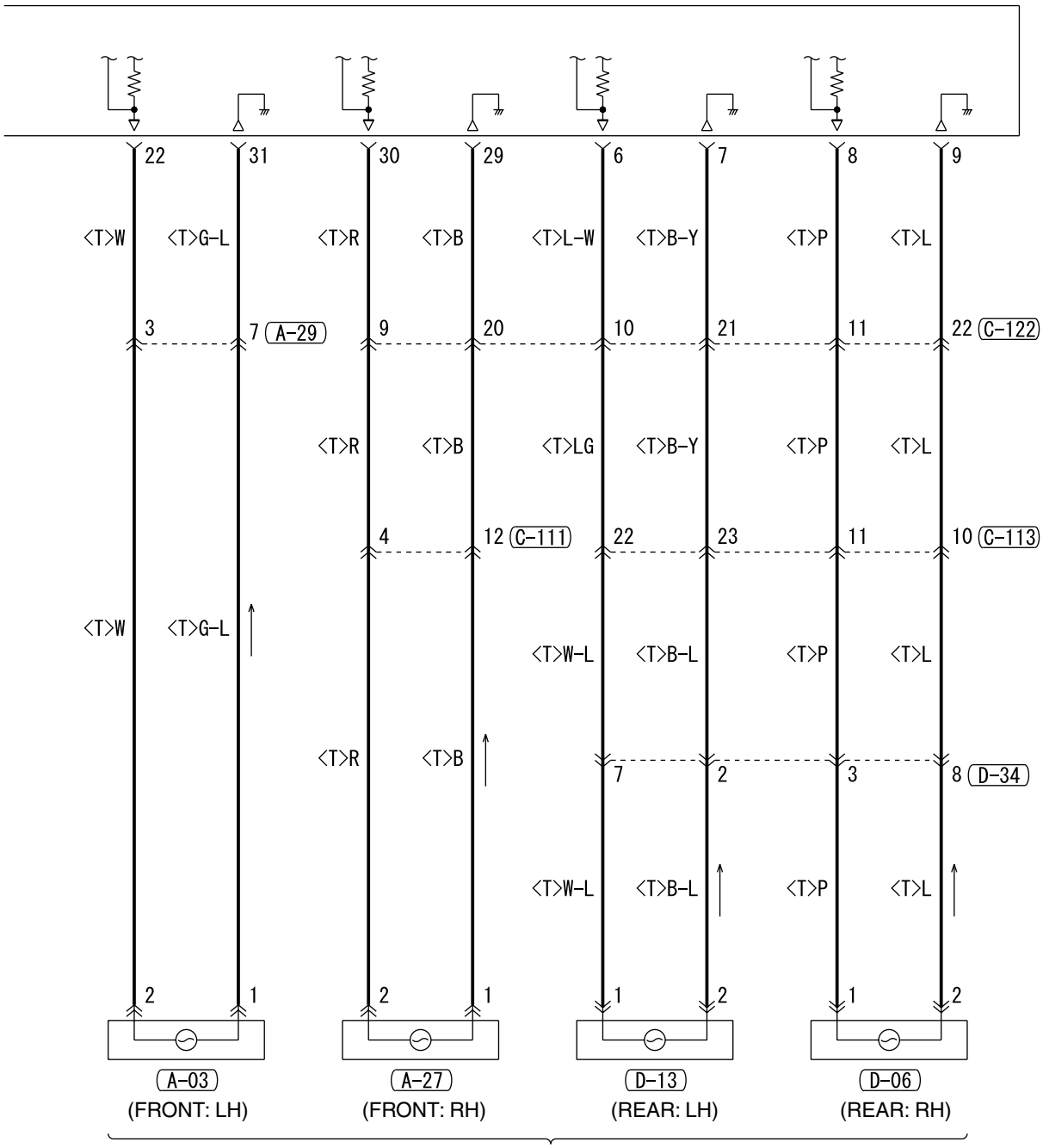

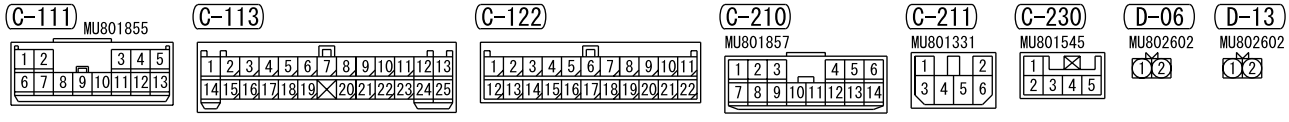

Wire colour code
B : Black LG : Light green G : Green L : Blue W : White Y : Yellow SB : Sky blue
BR : Brown O : Orange GR : Gray R : Red P : Pink V : Violet

H4J15E13BB

ANTI-SKID BRAKING SYSTEM (ABS) <LH drive vehicles> (CONTINUED)

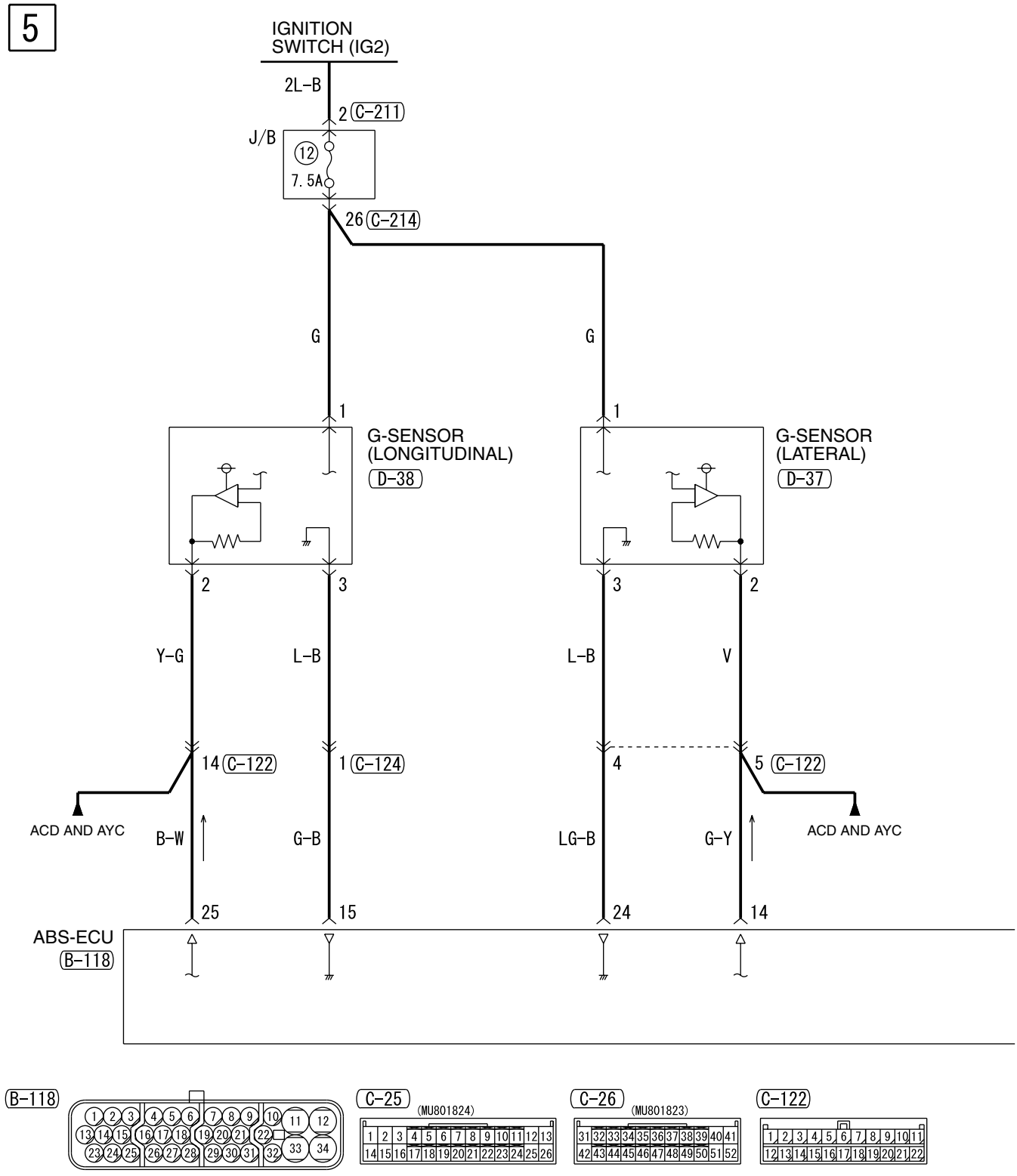

H4J15E13CA

6

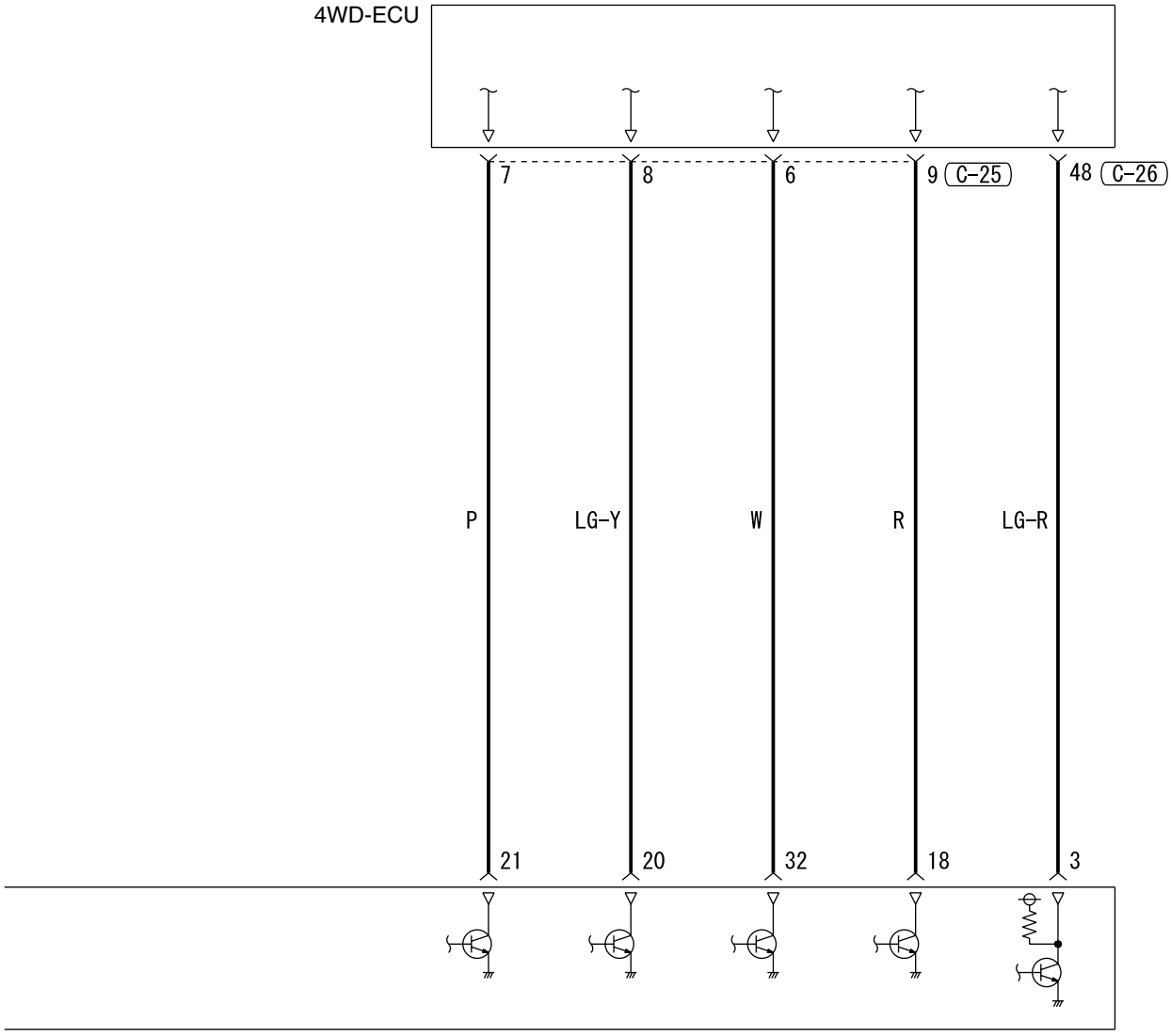

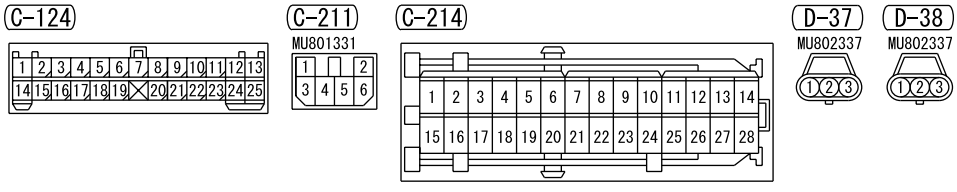

H4J15E13CB

ANTI-SKID BRAKING SYSTEM (ABS) <LH drive vehicles> (CONTINUED)

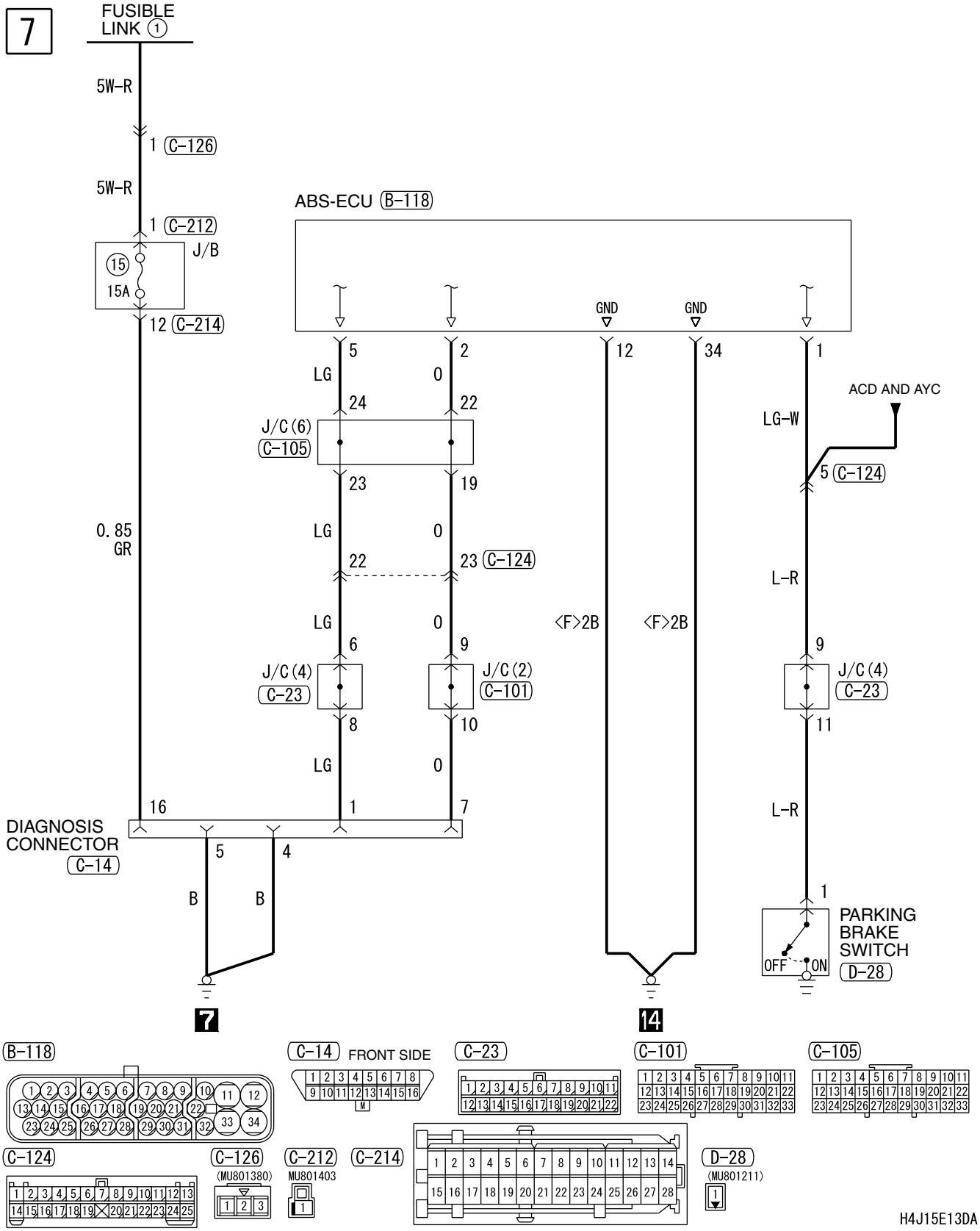

NOTES

ANTI-SKID BRAKING SYSTEM (ABS) <RH drive vehicles>

M3030008400531

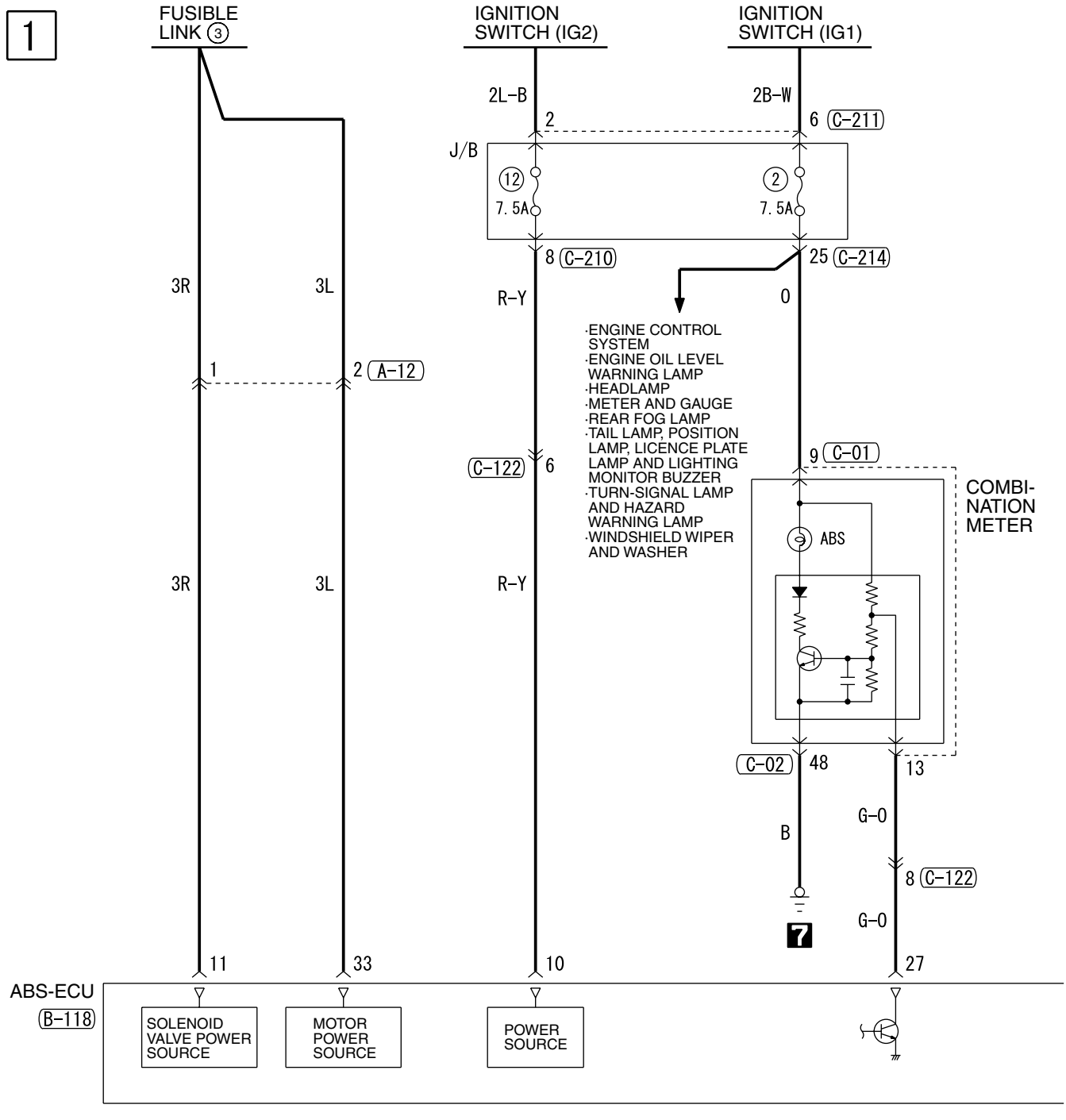

H4J15E14AA

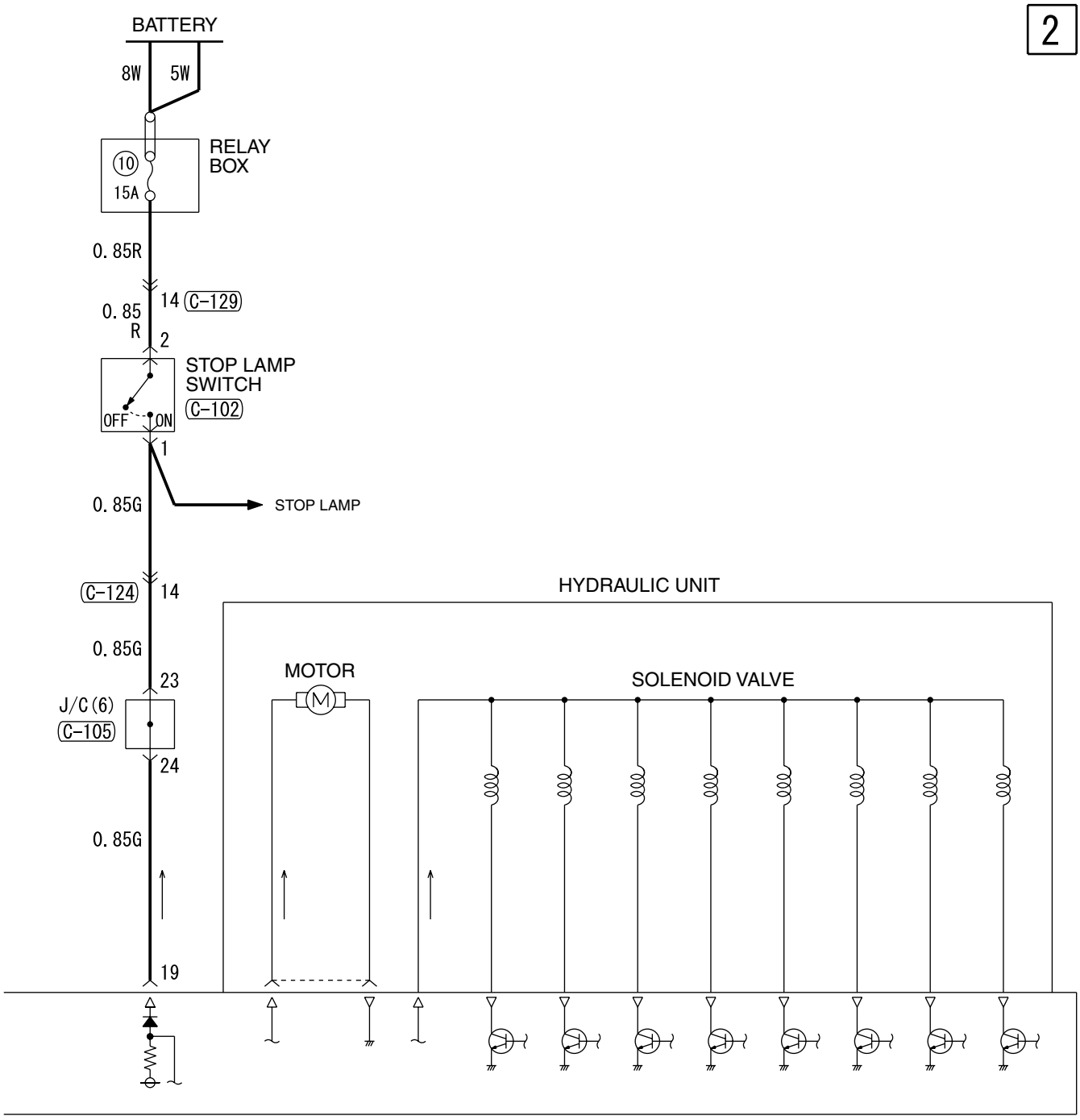

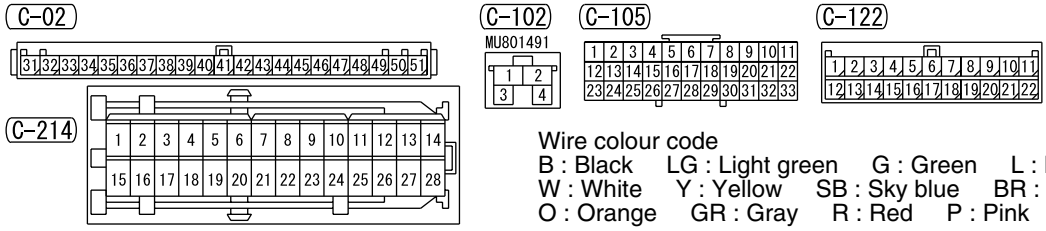

Wire colour code
B : Black LG : Light green G : Green L : Blue
W : White Y : Yellow SB : Sky blue BR : Brown
O : Orange GR : Gray R : Red P : Pink V : Violet

H4J15E14AB

ANTI-SKID BRAKING SYSTEM (ABS) <RH drive vehicles> (CONTINUED)

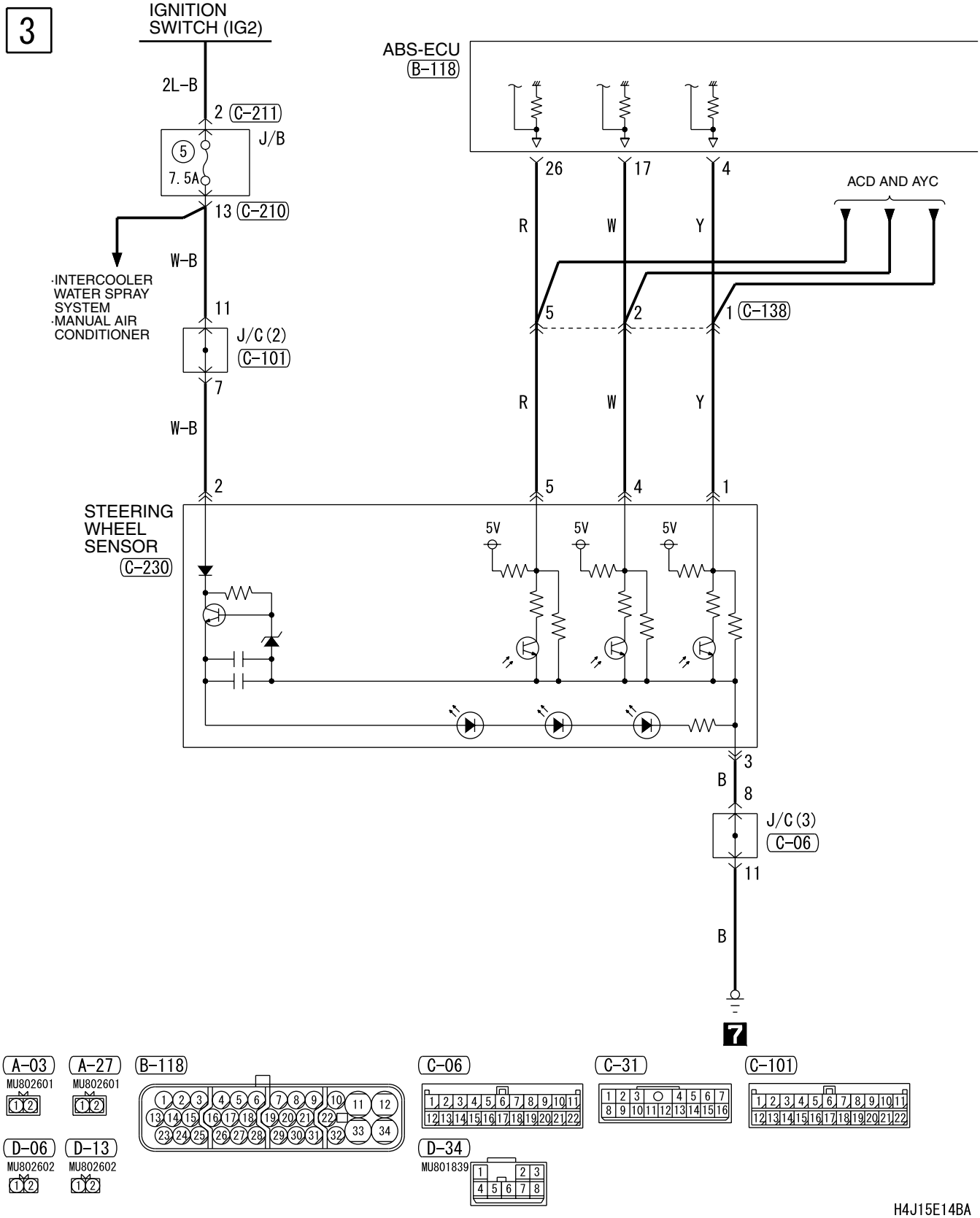

H4J15E14BA

4

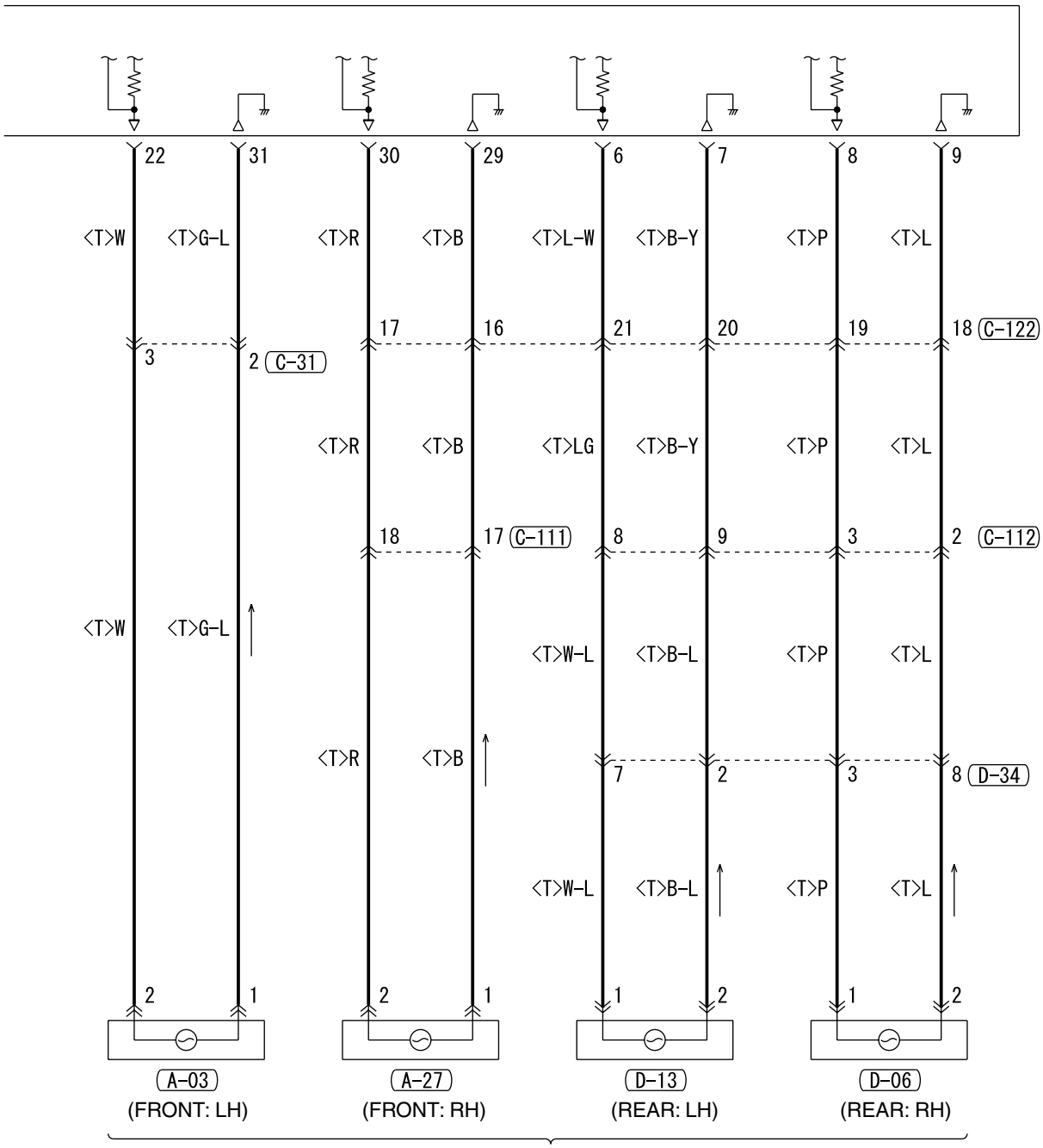

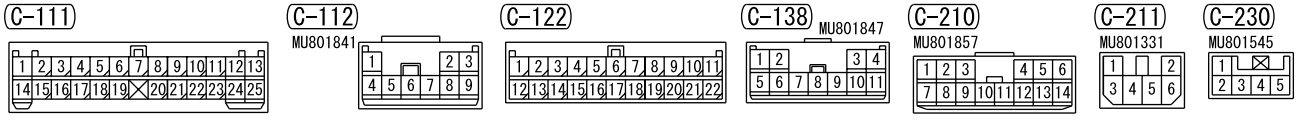

Wire colour code
B : Black LG : Light green G : Green L : Blue W : White Y : Yellow SB : Sky blue
BR : Brown O : Orange GR : Gray R : Red P : Pink V : Violet

H4J15E14BB

ANTI-SKID BRAKING SYSTEM (ABS) <RH drive vehicles> (CONTINUED)

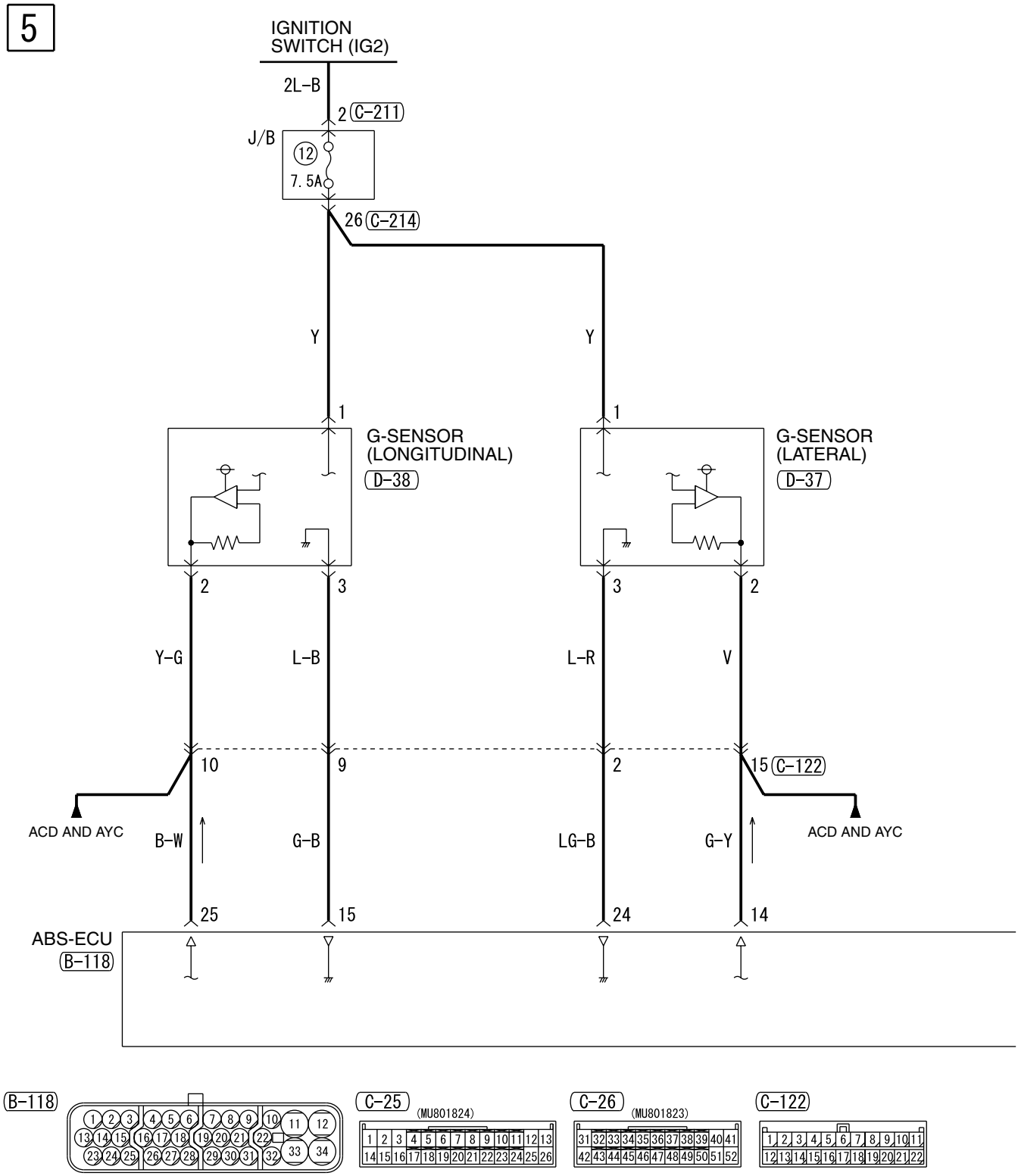

H4J15E14CA

6

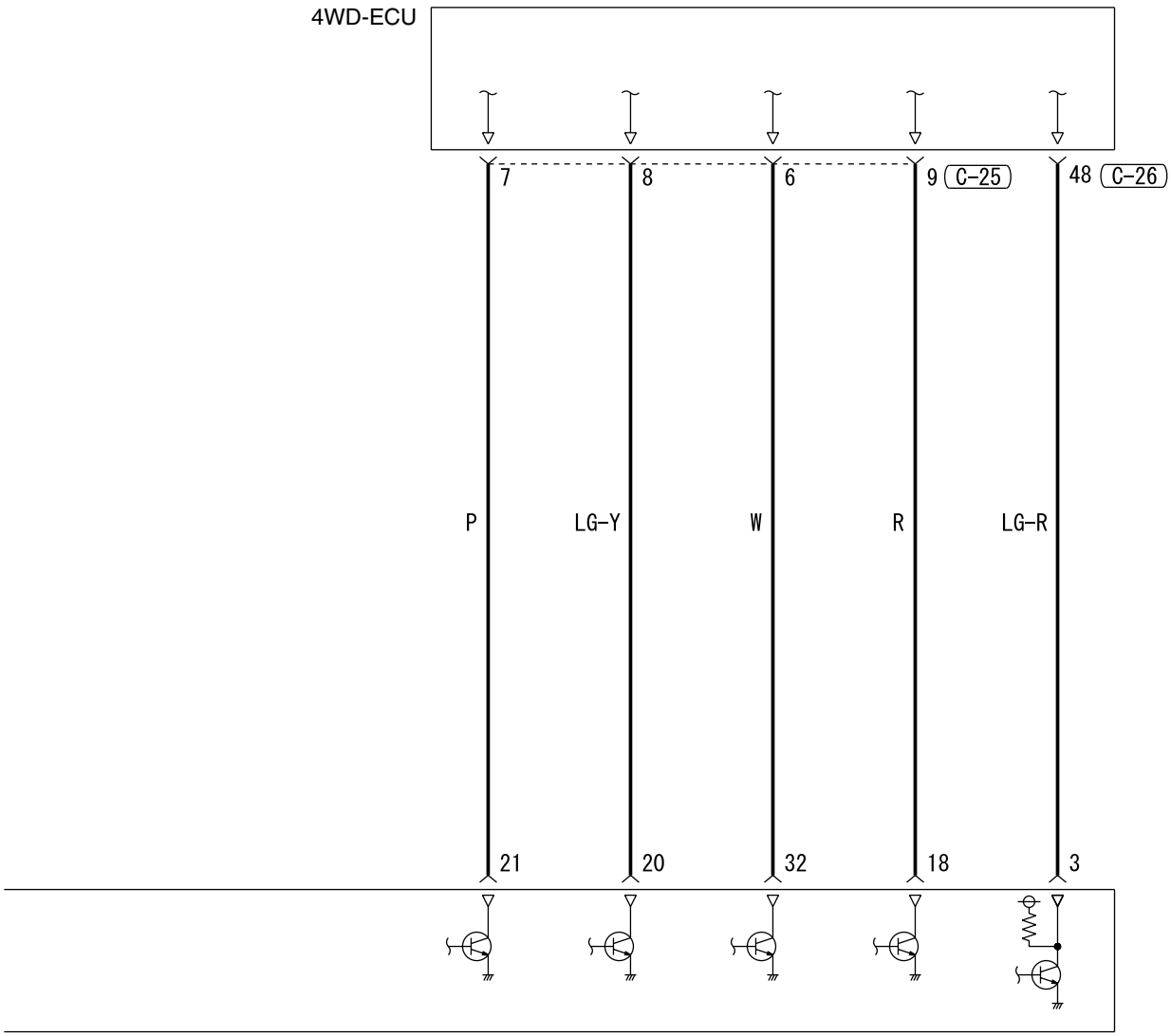

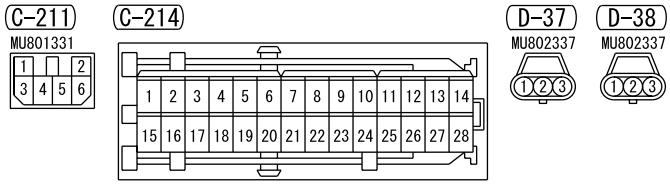

Wire colour code
B : Black LG : Light green G : Green L : Blue
W : White Y : Yellow SB : Sky blue BR : Brown
O : Orange GR : Gray R : Red P : Pink V : Violet

H4J15E14CB

ANTI-SKID BRAKING SYSTEM (ABS) <RH drive vehicles> (CONTINUED)

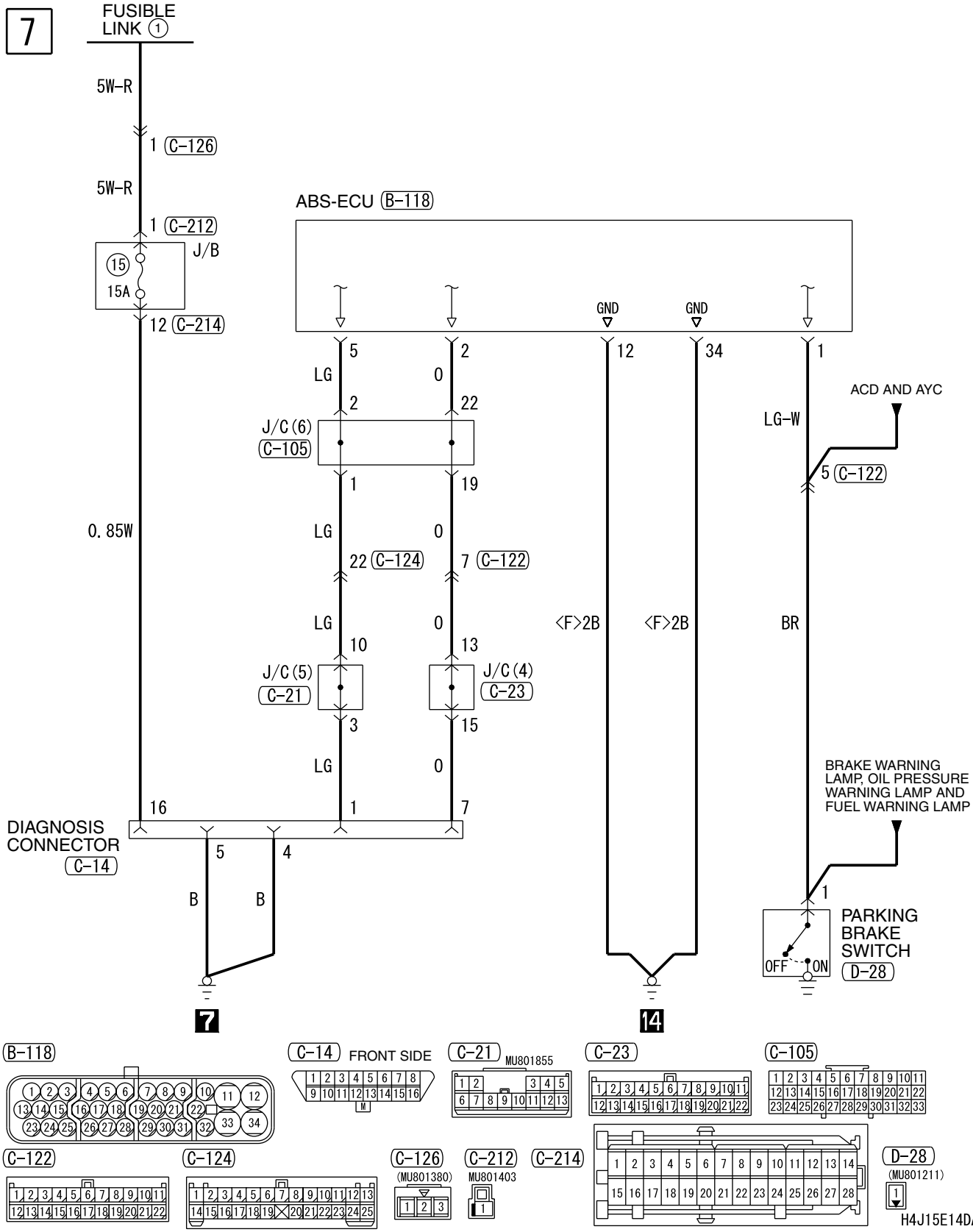

NOTES

SUPPLEMENTAL RESTRAINT SYSTEM (SRS)

SUPPLEMENTAL RESTRAINT SYSTEM (SRS) <LH drive vehicles>

M3030009700319

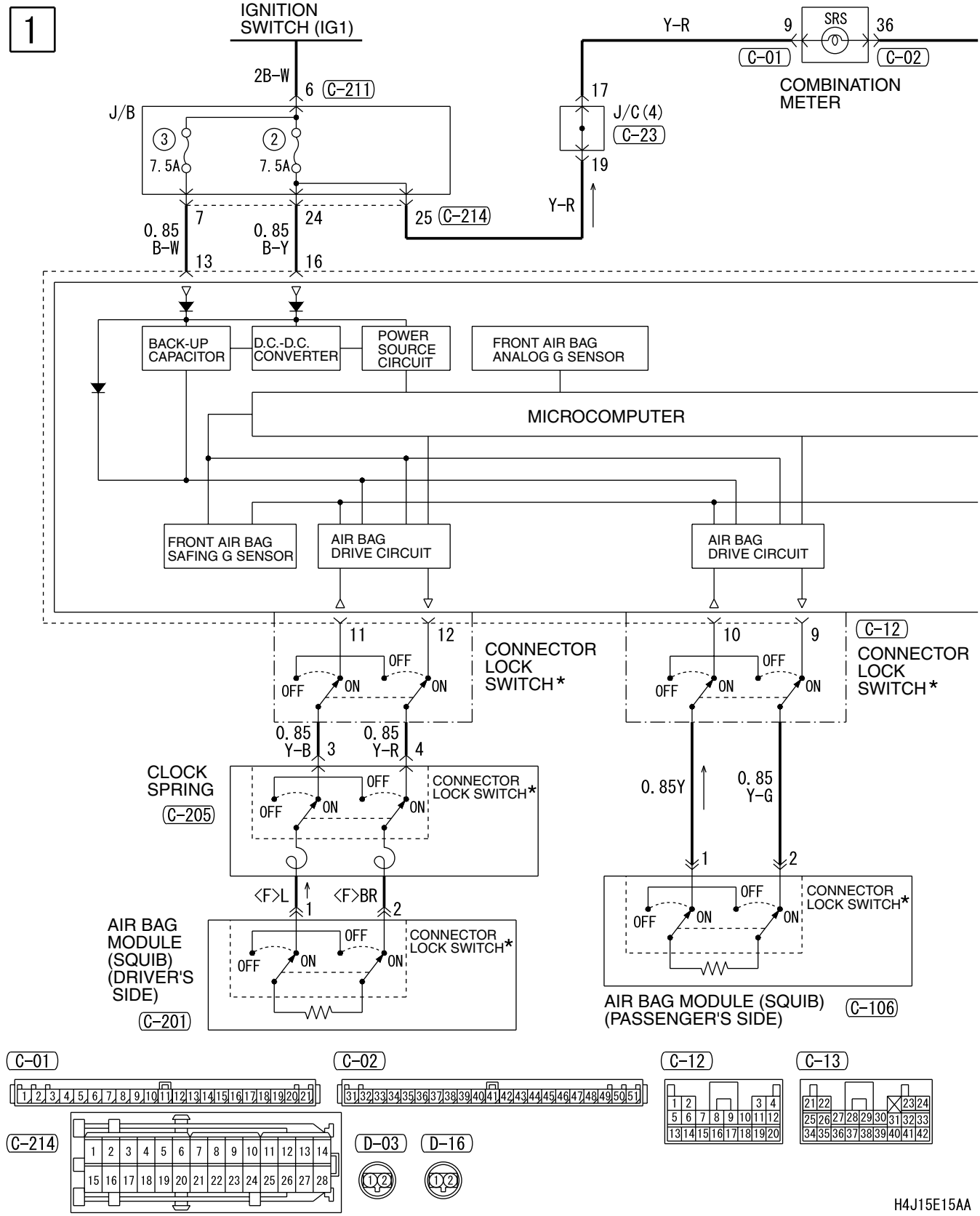

H4J15E15AA

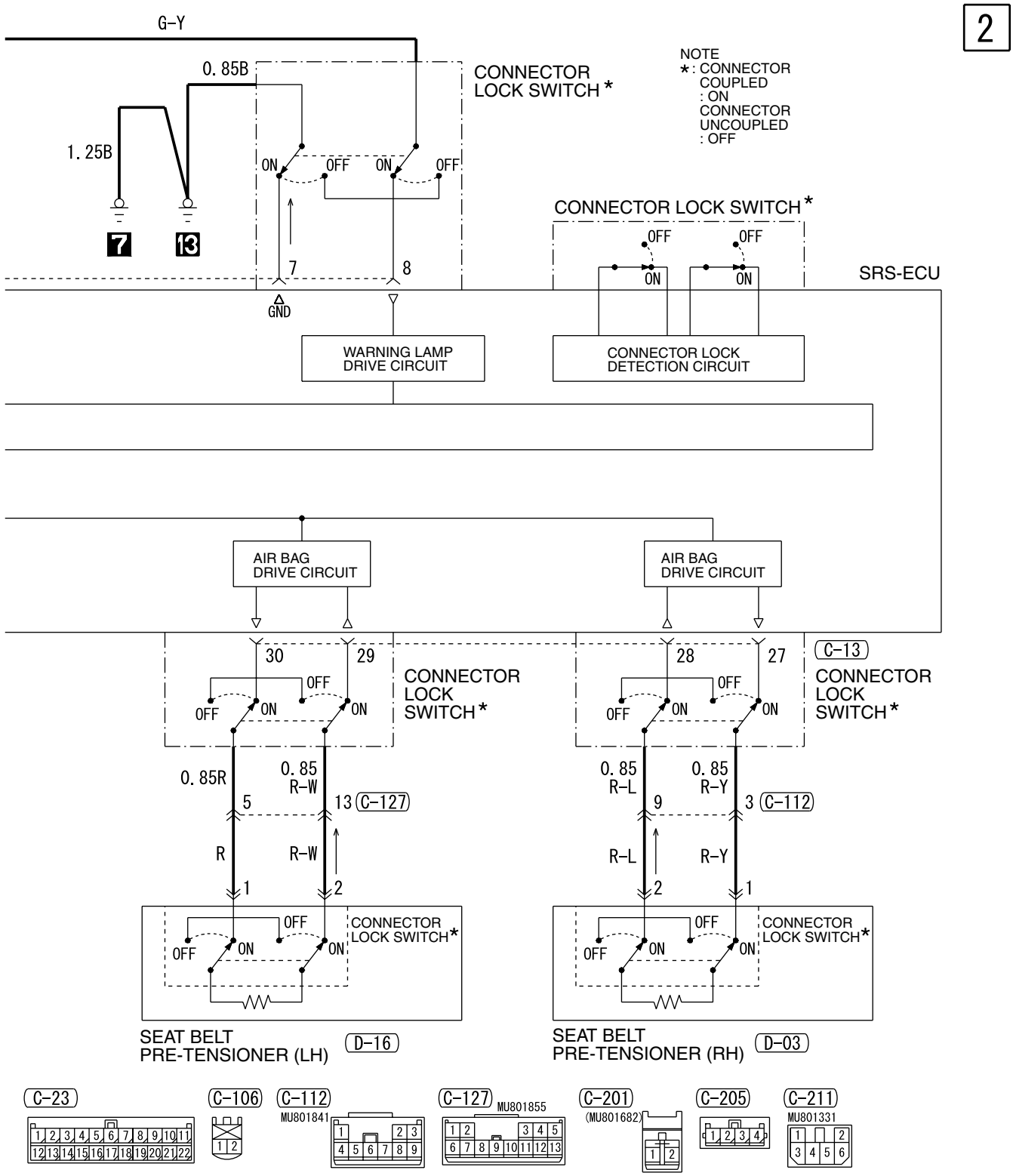

Wire colour code
B : Black LG : Light green G : Green L : Blue W : White Y : Yellow SB : Sky blue
BR : Brown O : Orange GR : Gray R : Red P : Pink V : Violet

H4J15E15AB

SUPPLEMENTAL RESTRAINT SYSTEM (SRS) <LH drive vehicles> (CONTINUED)

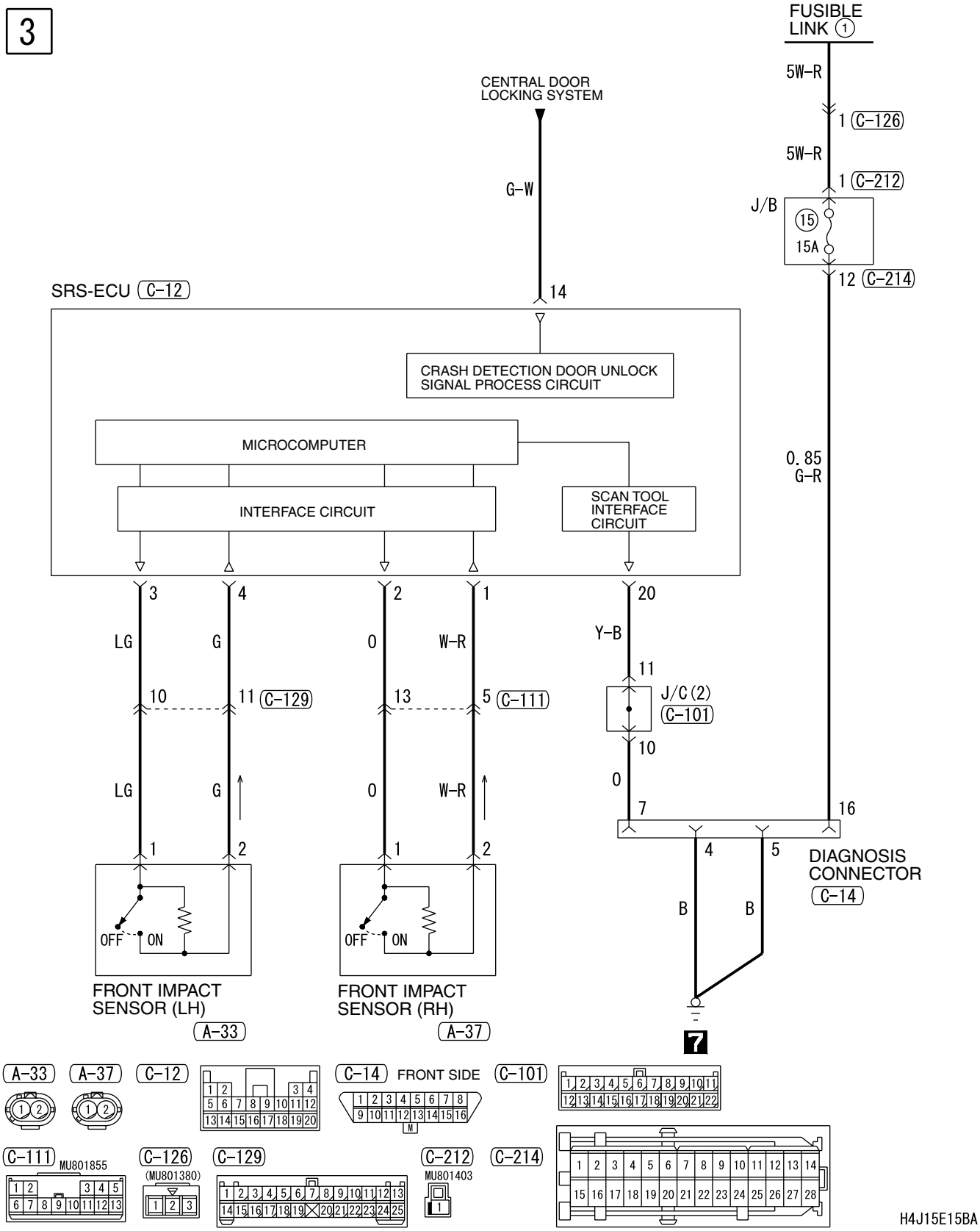

H4J15E15BA

NOTES

SUPPLEMENTAL RESTRAINT SYSTEM (SRS) <RH drive vehicles>

M3030009700320

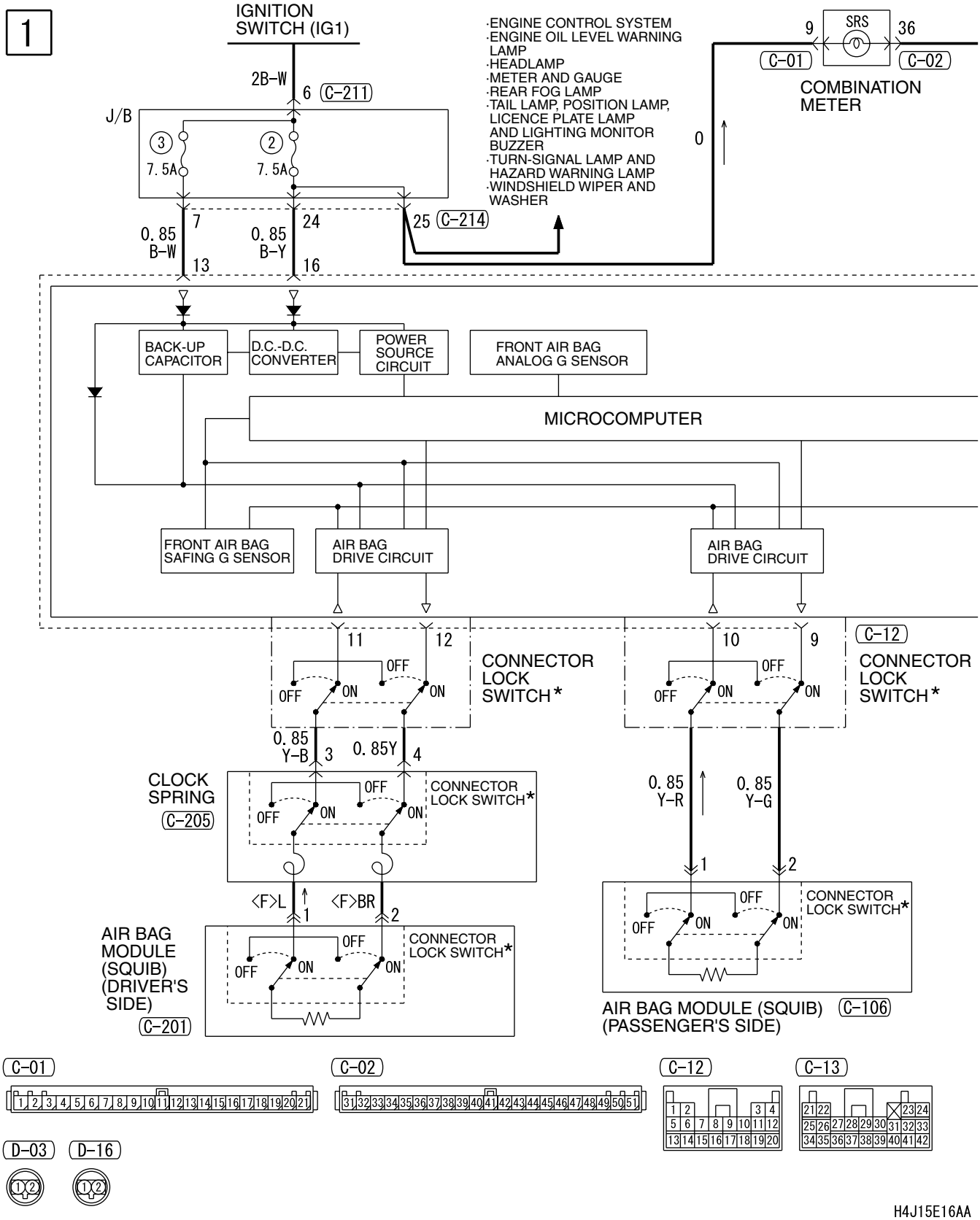

H4J15E16AA

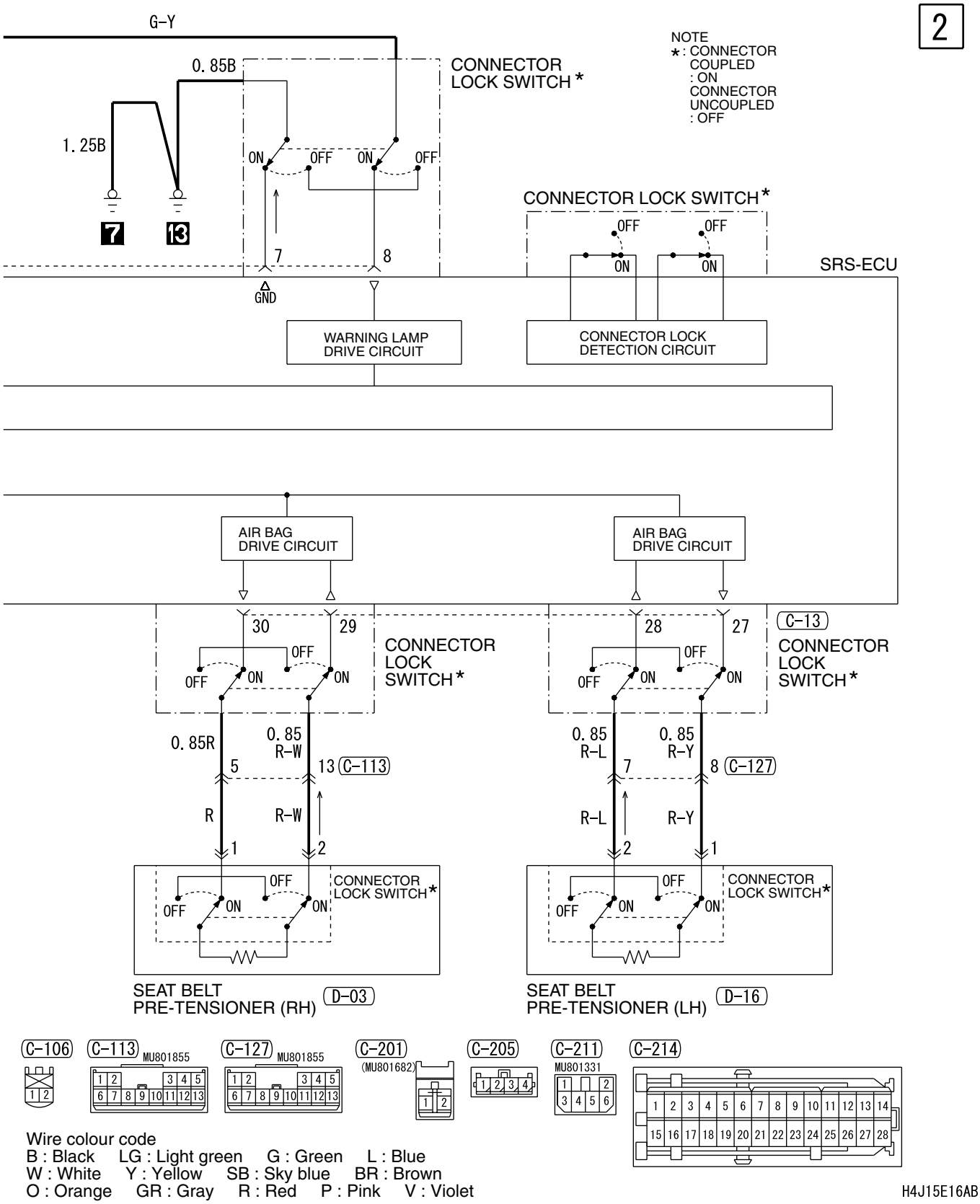

Wire colour code
B : Black LG : Light green G : Green L : Blue
W : White Y : Yellow SB : Sky blue BR : Brown
O : Orange GR : Gray R : Red P : Pink V : Violet

H4J15E16AB

SUPPLEMENTAL RESTRAINT SYSTEM (SRS) <RH drive vehicles> (CONTINUED)

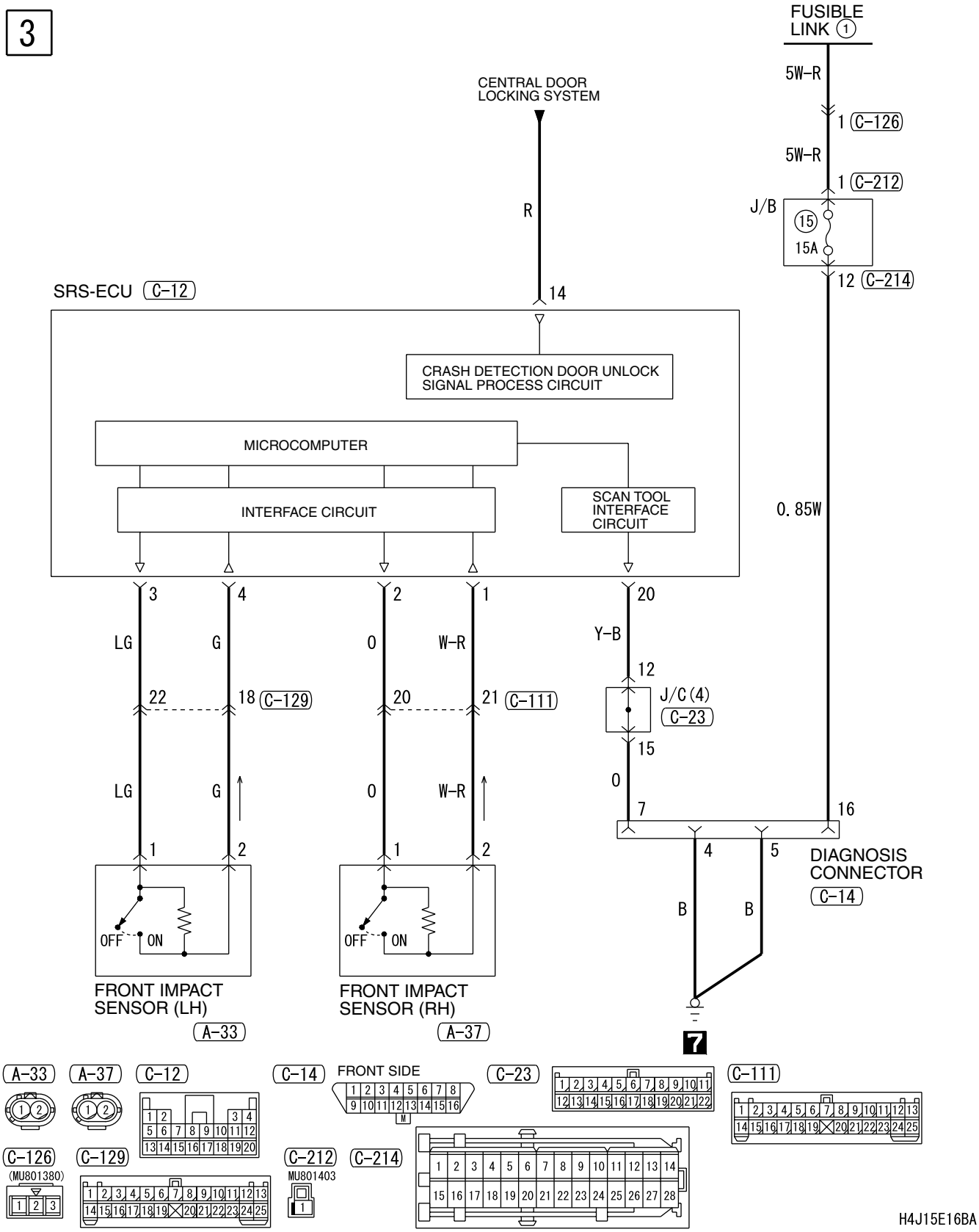

NOTES

ACD AND AYC

ACD AND AYC <LH drive vehicles>

M3030018400026

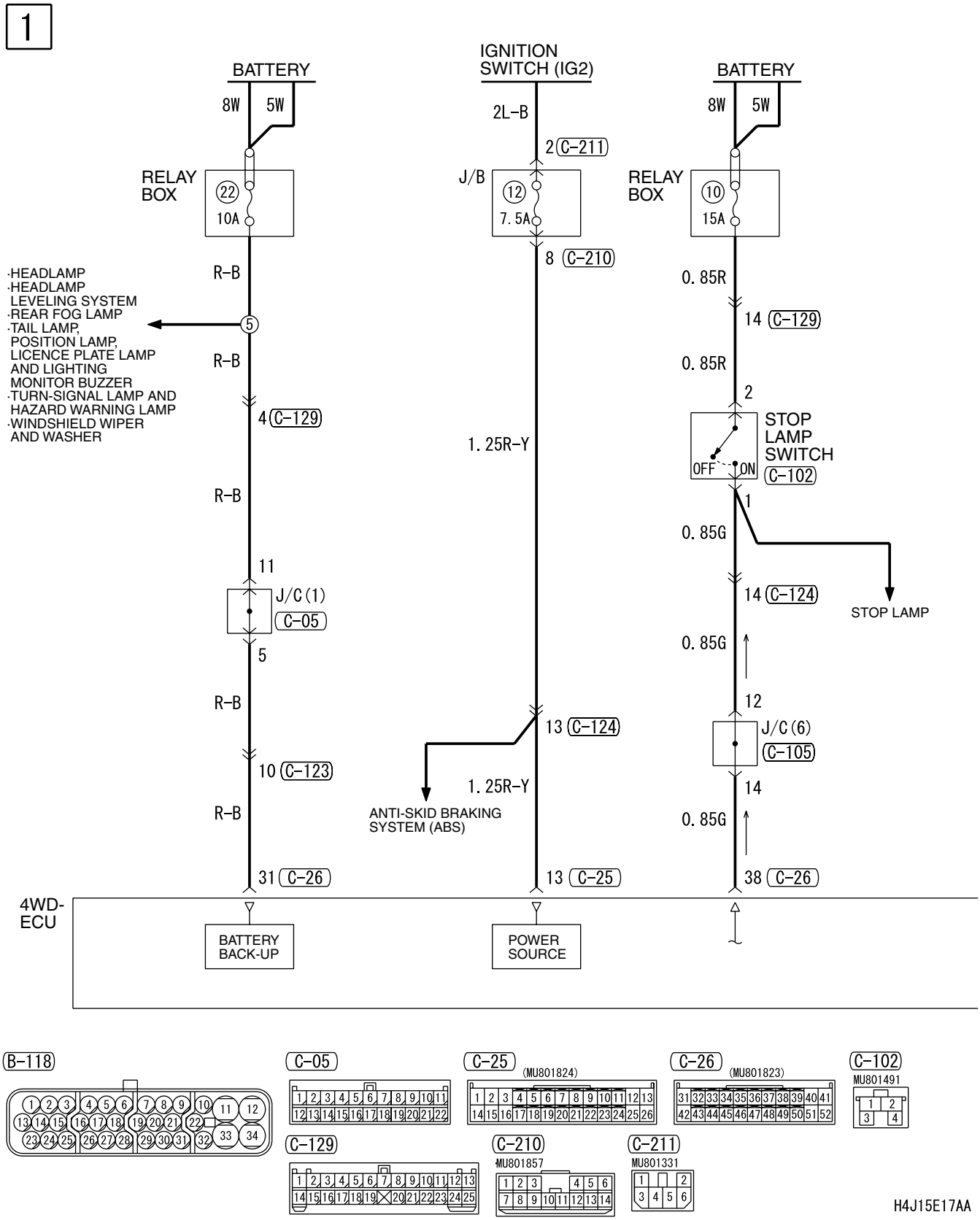

2

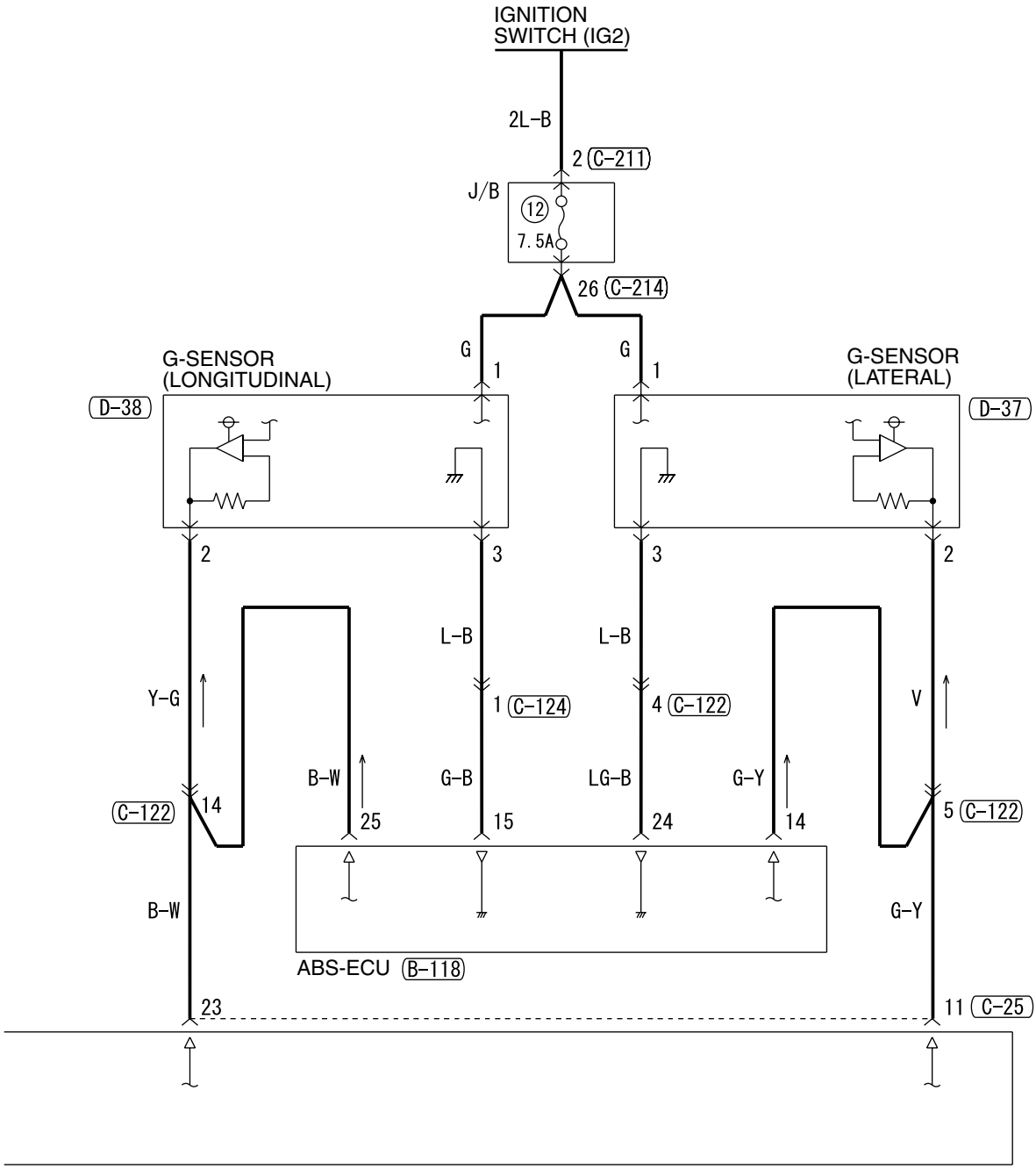

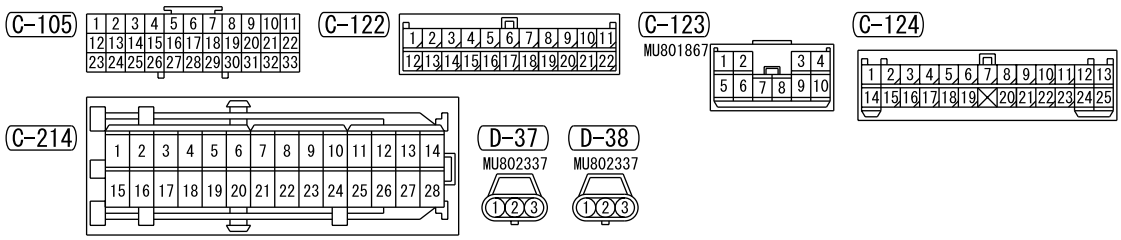

H4J15E17AB

ACD AND AYC <LH drive vehicles> (CONTINUED)

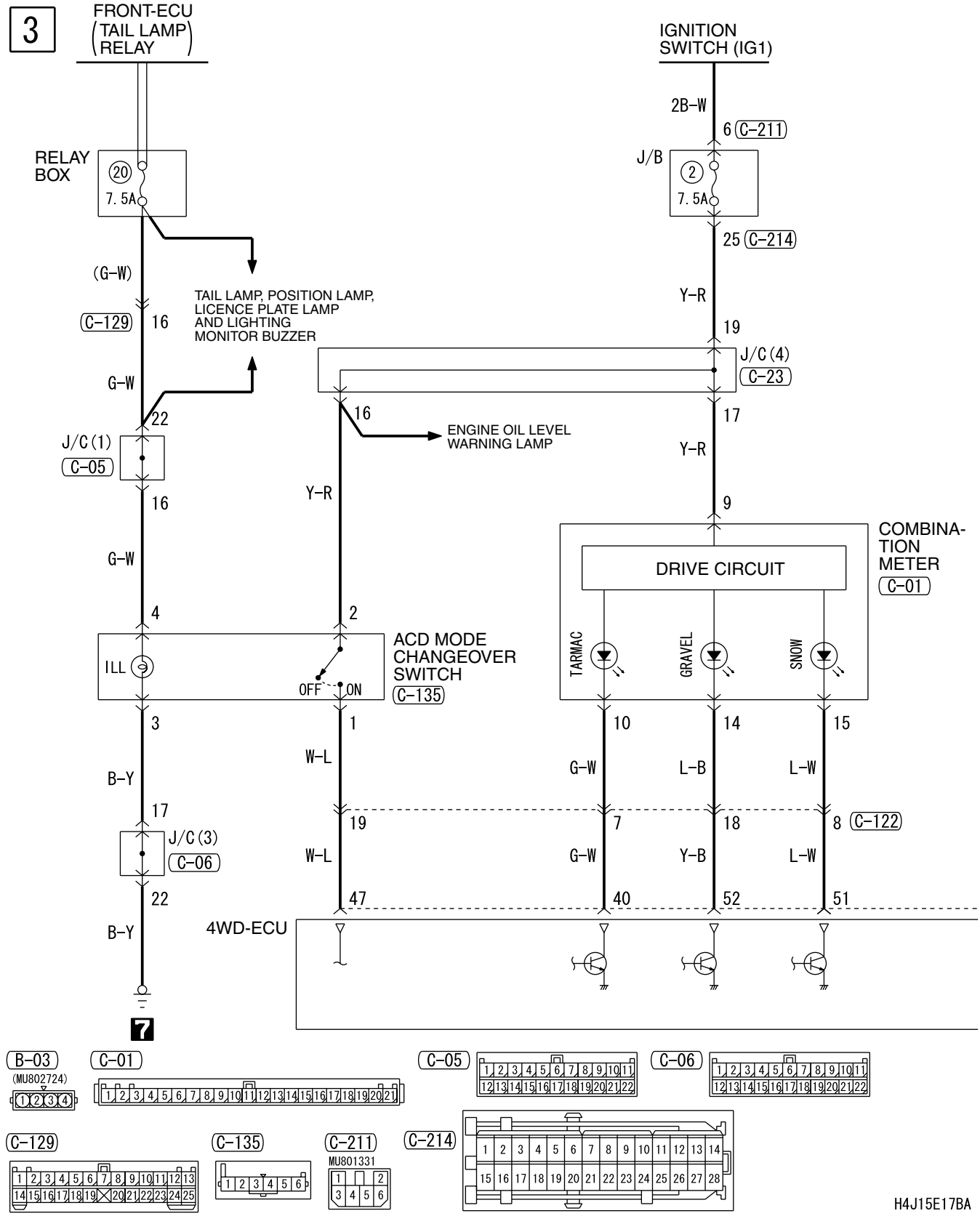

4

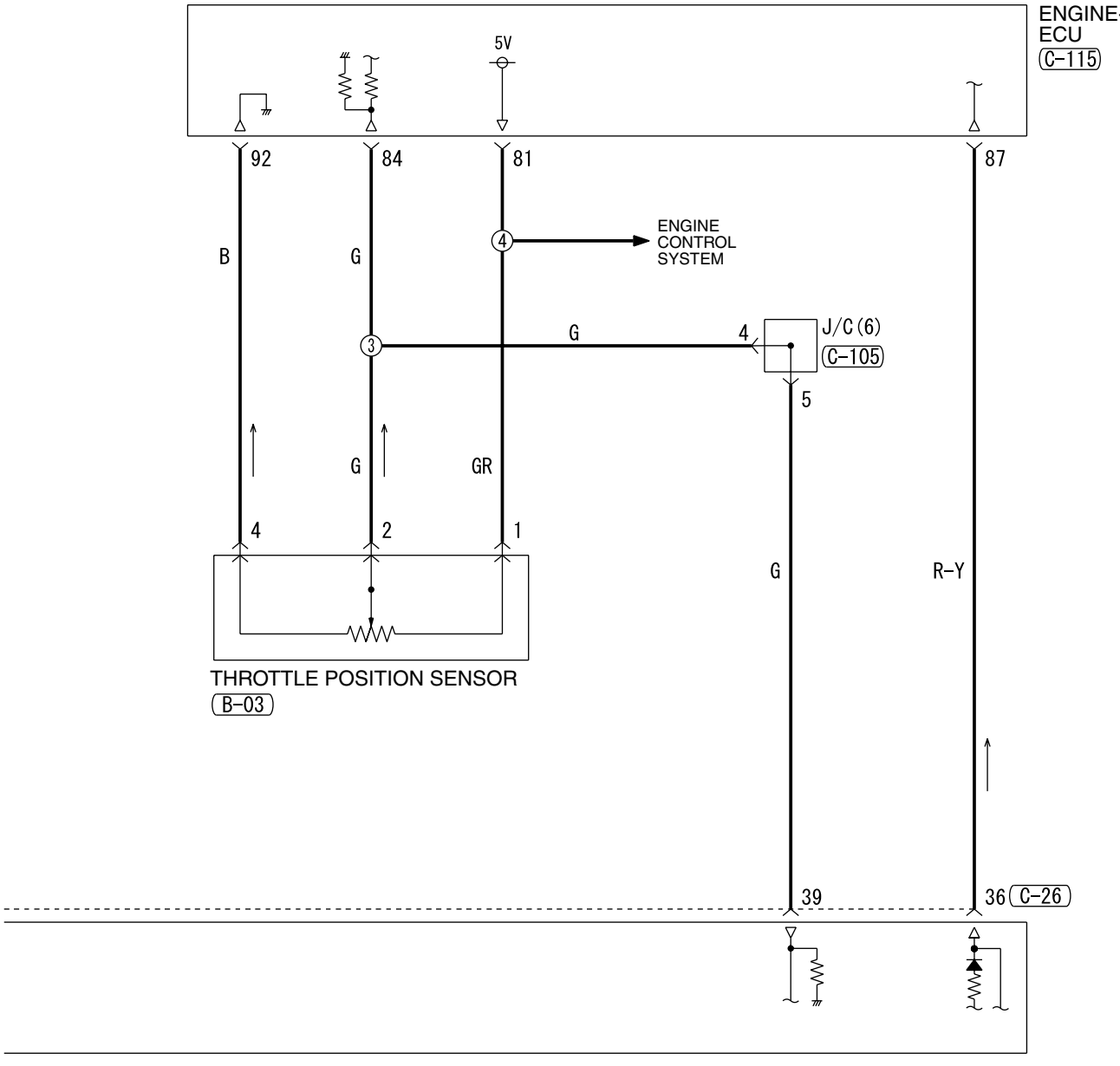

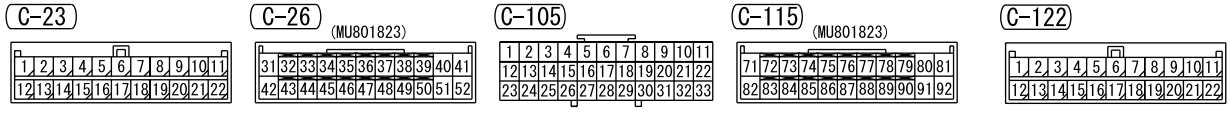

Wire colour code
B : Black LG : Light green G : Green L : Blue W : White Y : Yellow SB : Sky blue
BR : Brown O : Orange GR : Gray R : Red P : Pink V : Violet

H4J15E17BB

ACD AND AYC <LH drive vehicles> (CONTINUED)

5

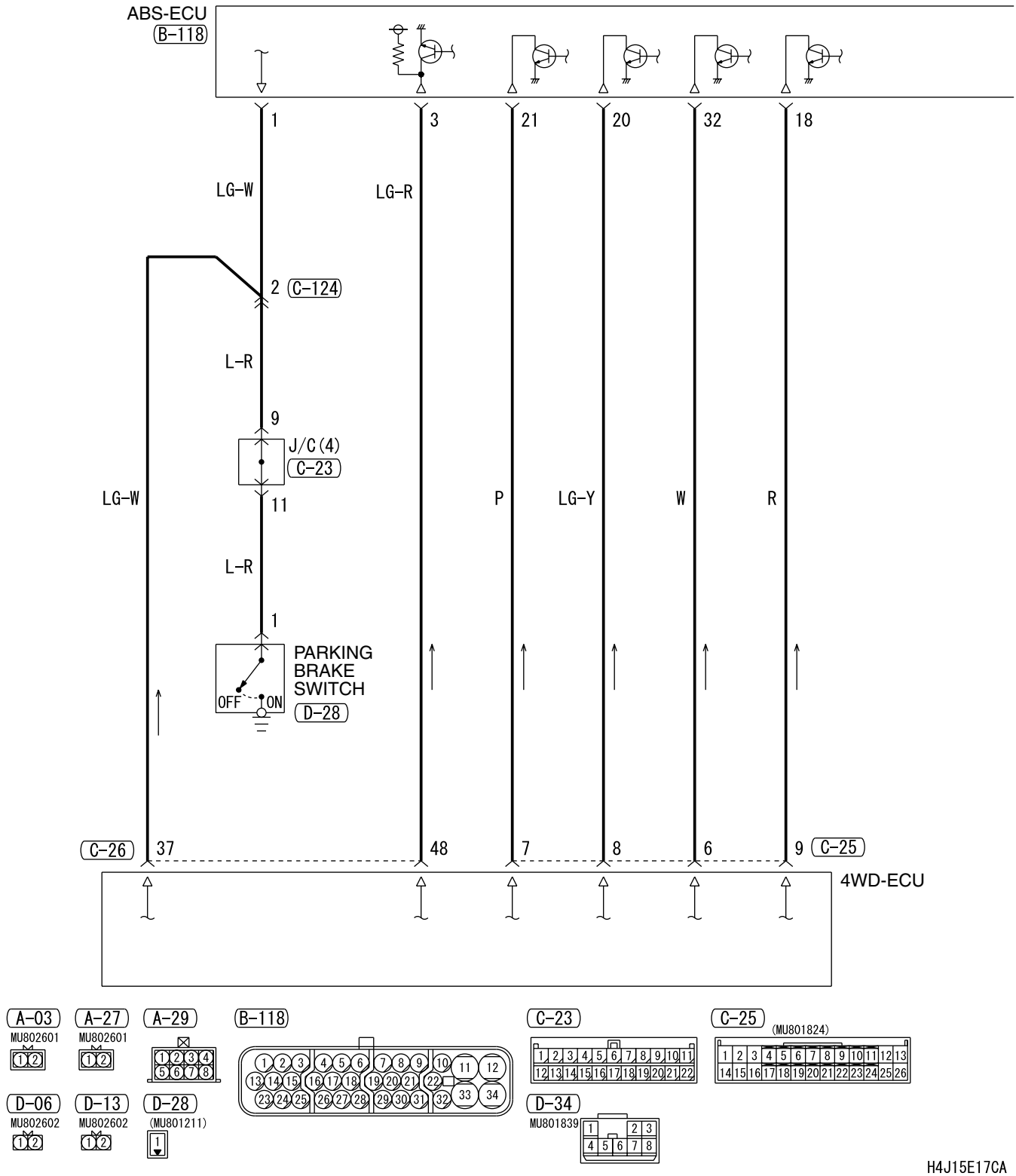

H4J15E17CA

6

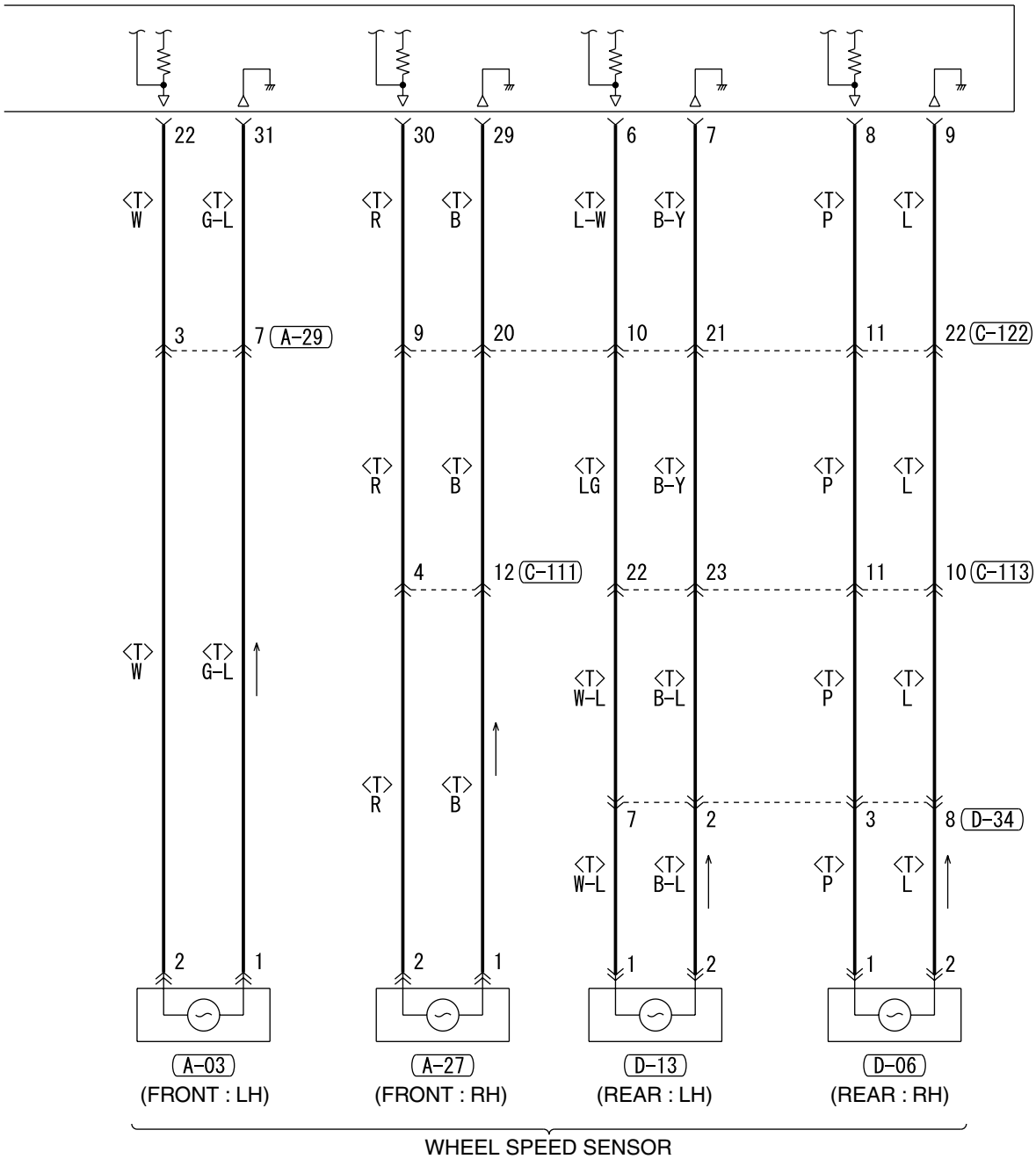

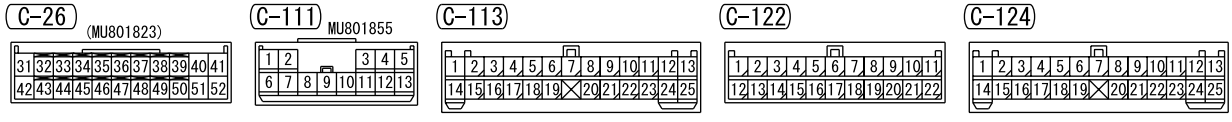

Wire colour code
B : Black LG : Light green G : Green L : Blue W : White Y : Yellow SB : Sky blue
BR : Brown O : Orange GR : Gray R : Red P : Pink V : Violet

H4J15E17CB

ACD AND AYC <LH drive vehicles> (CONTINUED)

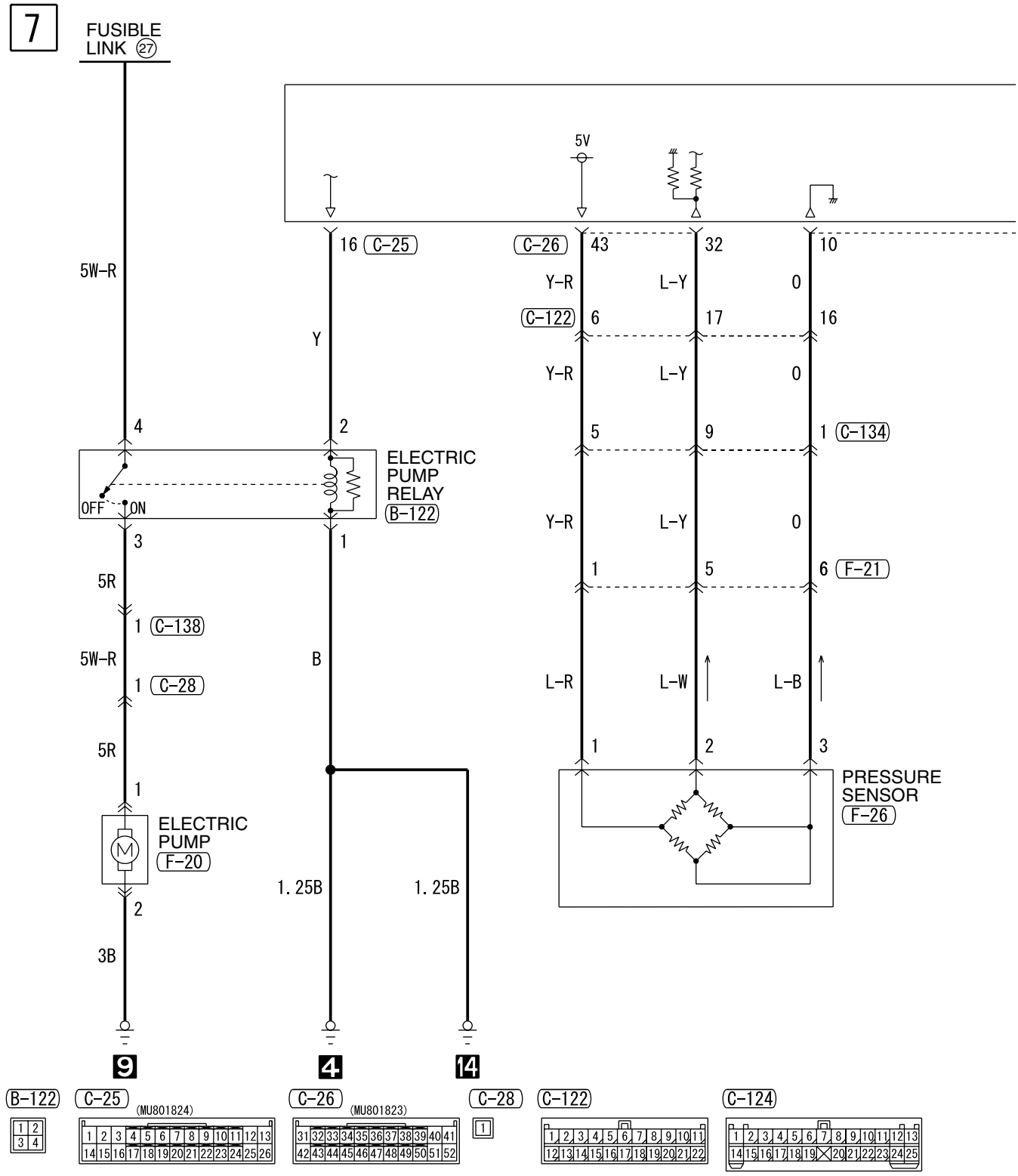

H4J15E17DA

8

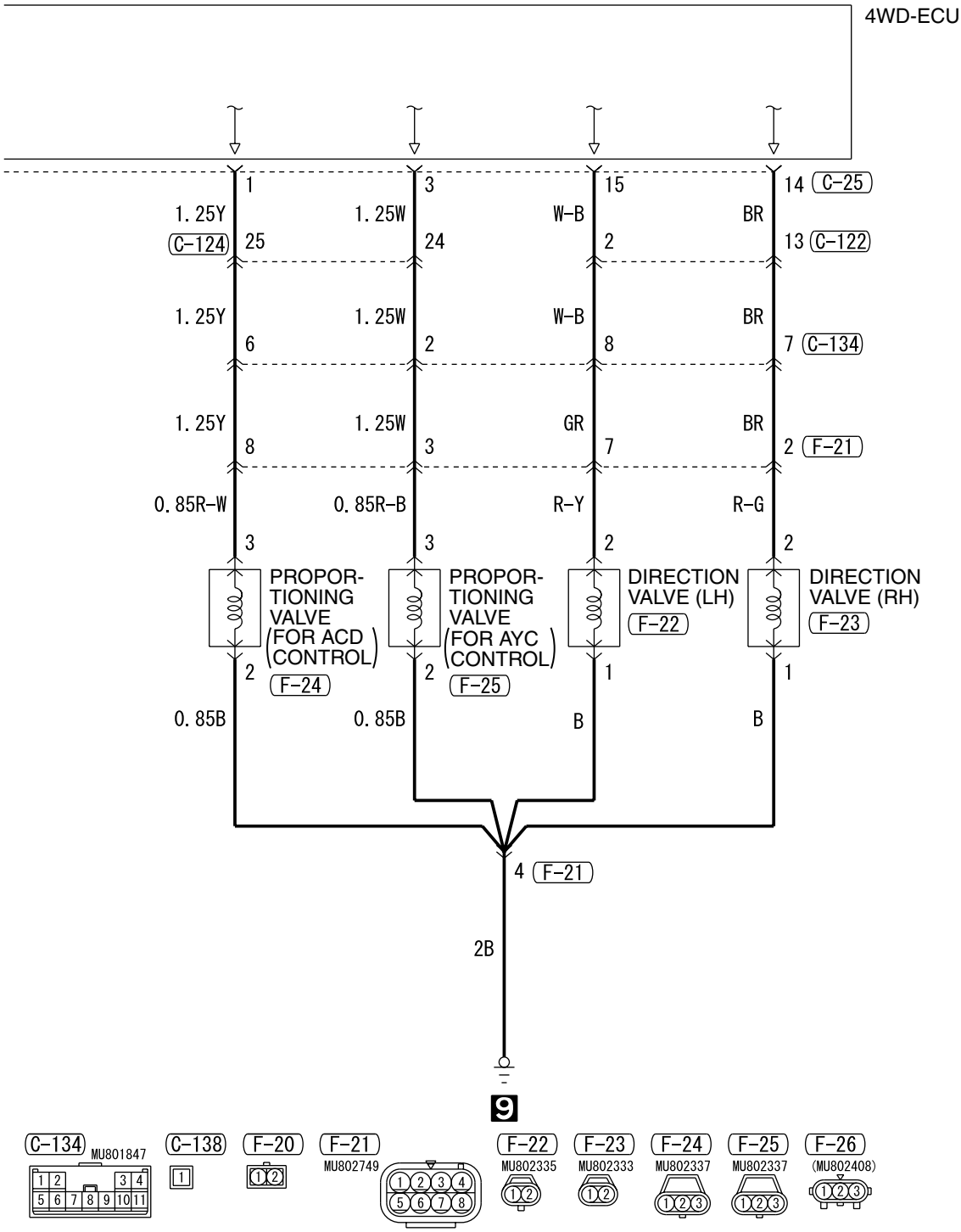

Wire colour code
B : Black LG : Light green G : Green L : Blue W : White Y : Yellow SB : Sky blue
BR : Brown O : Orange GR : Gray R : Red P : Pink V : Violet

H4J15E17DB

ACD AND AYC <LH drive vehicles> (CONTINUED)

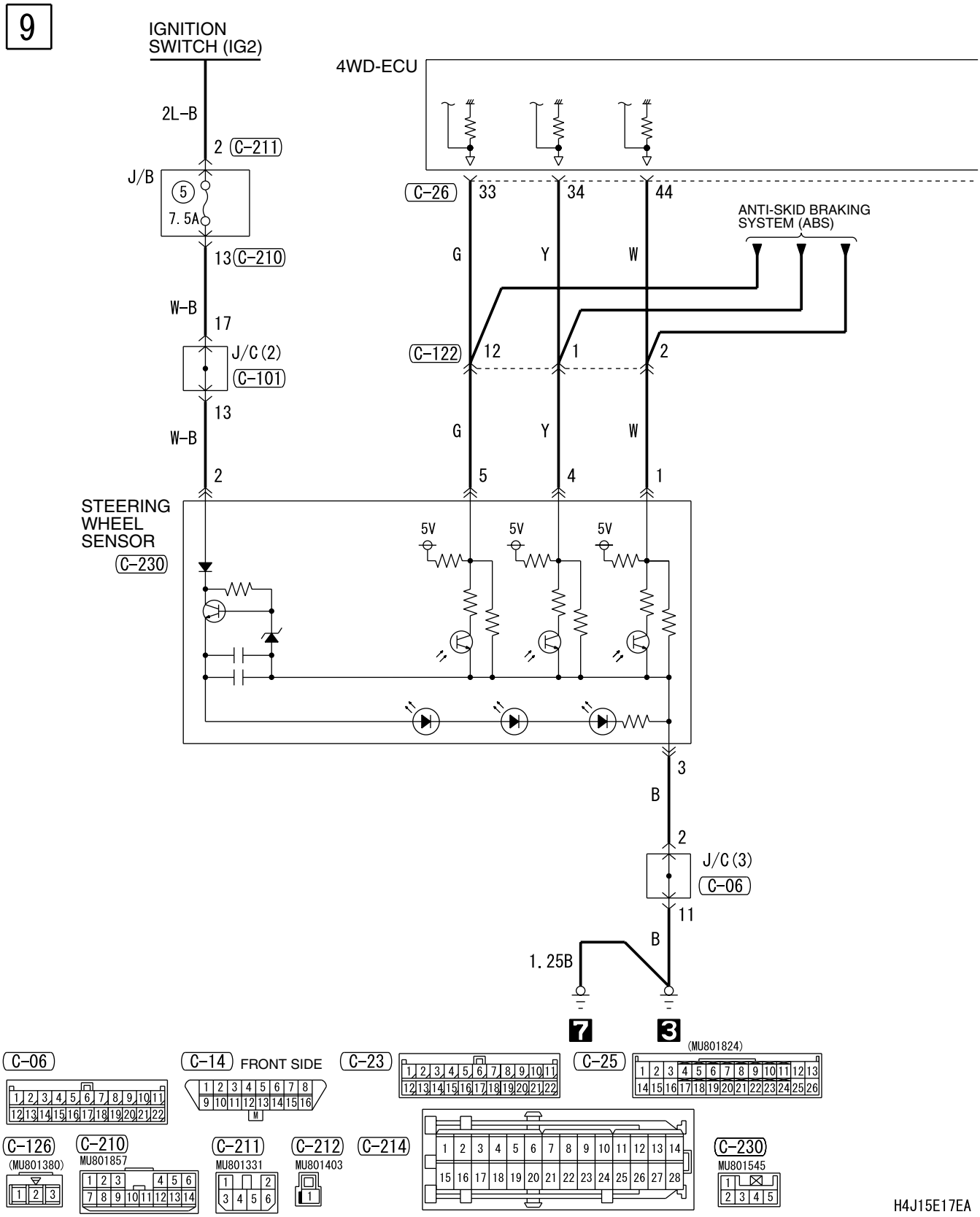

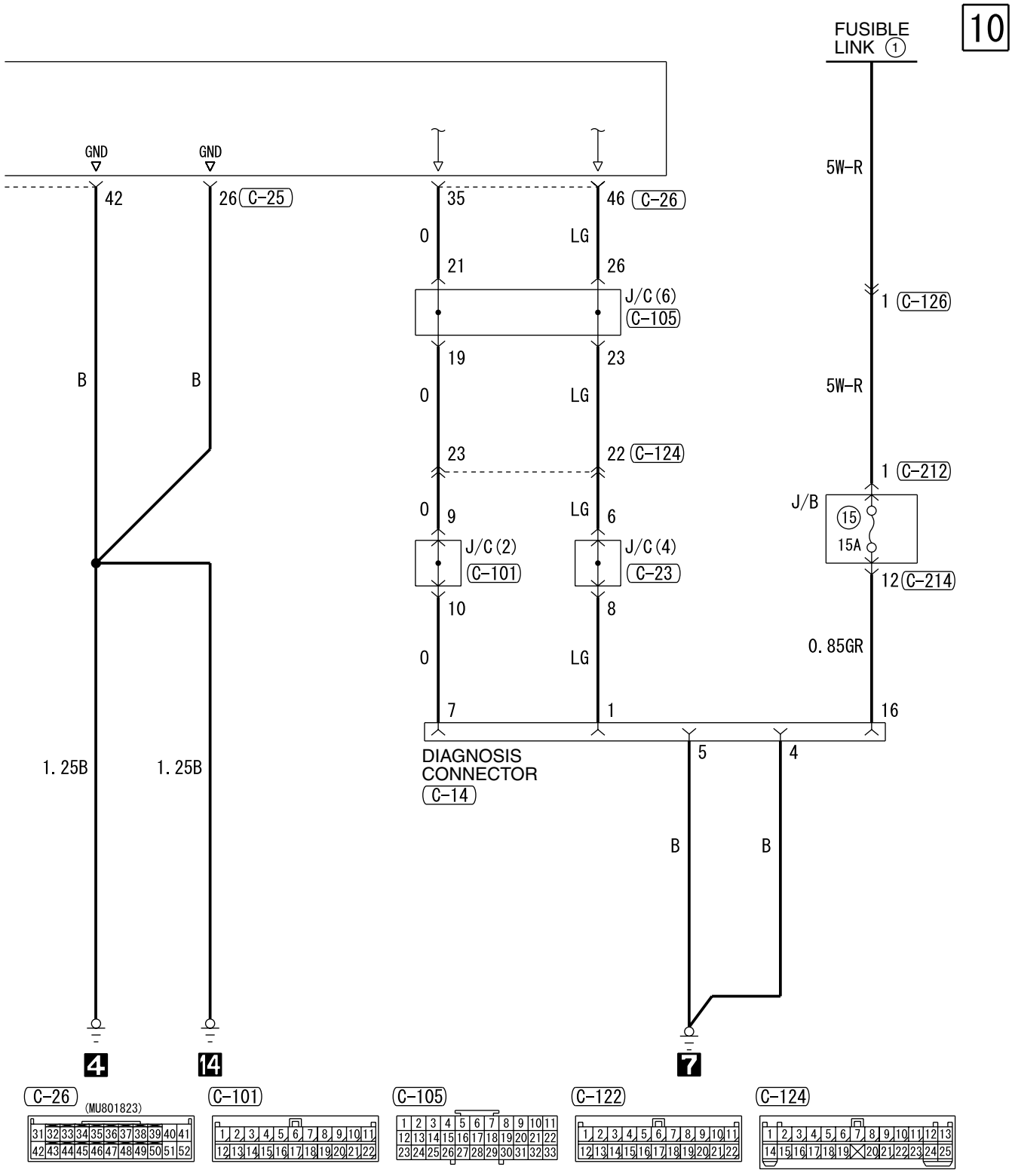

Wire colour code
B : Black LG : Light green G : Green L : Blue W : White Y : Yellow SB : Sky blue
BR : Brown O : Orange GR : Gray R : Red P : Pink V : Violet

H4J15E17EB

ACD AND AYC <RH drive vehicles>

M3030018400037

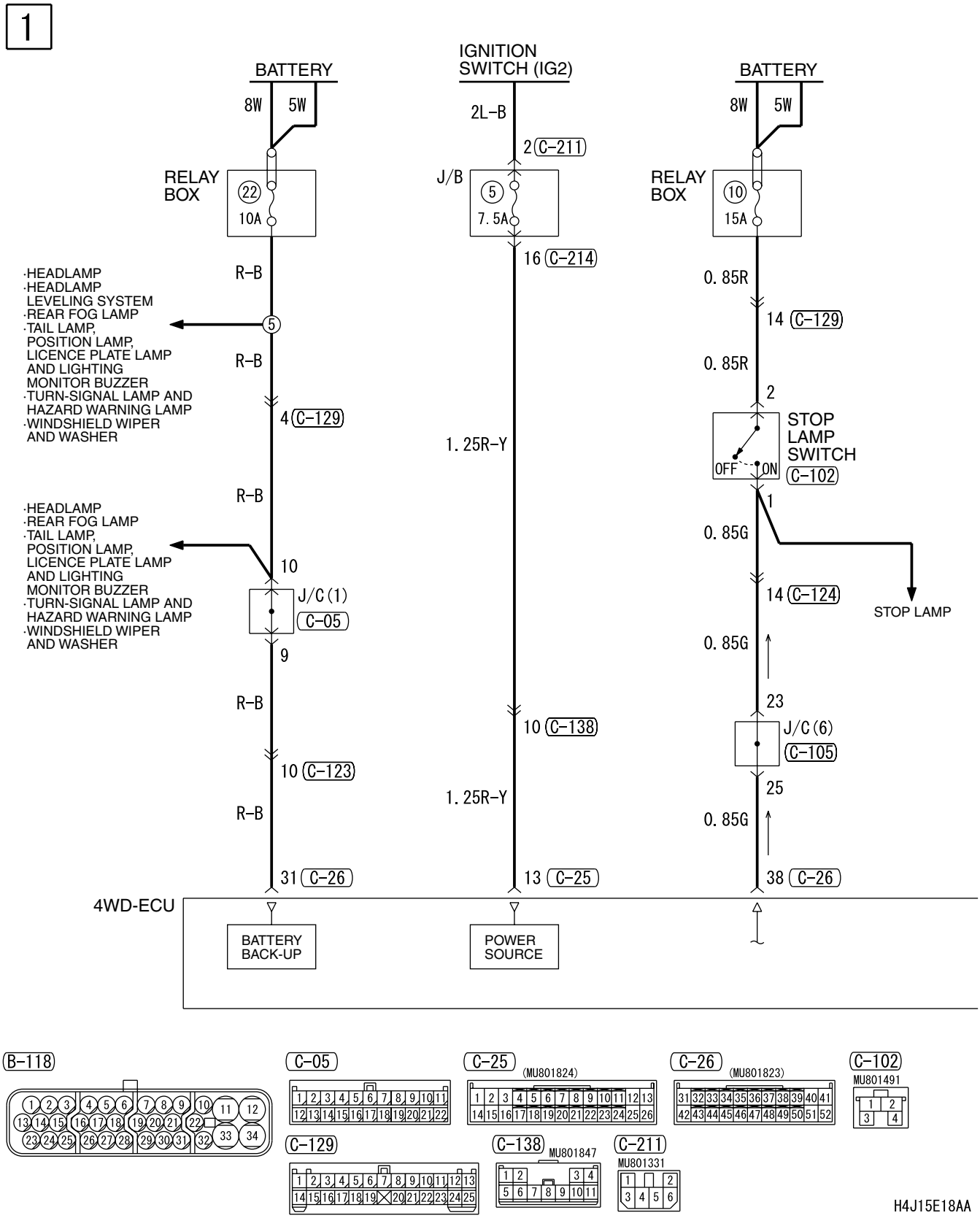

2

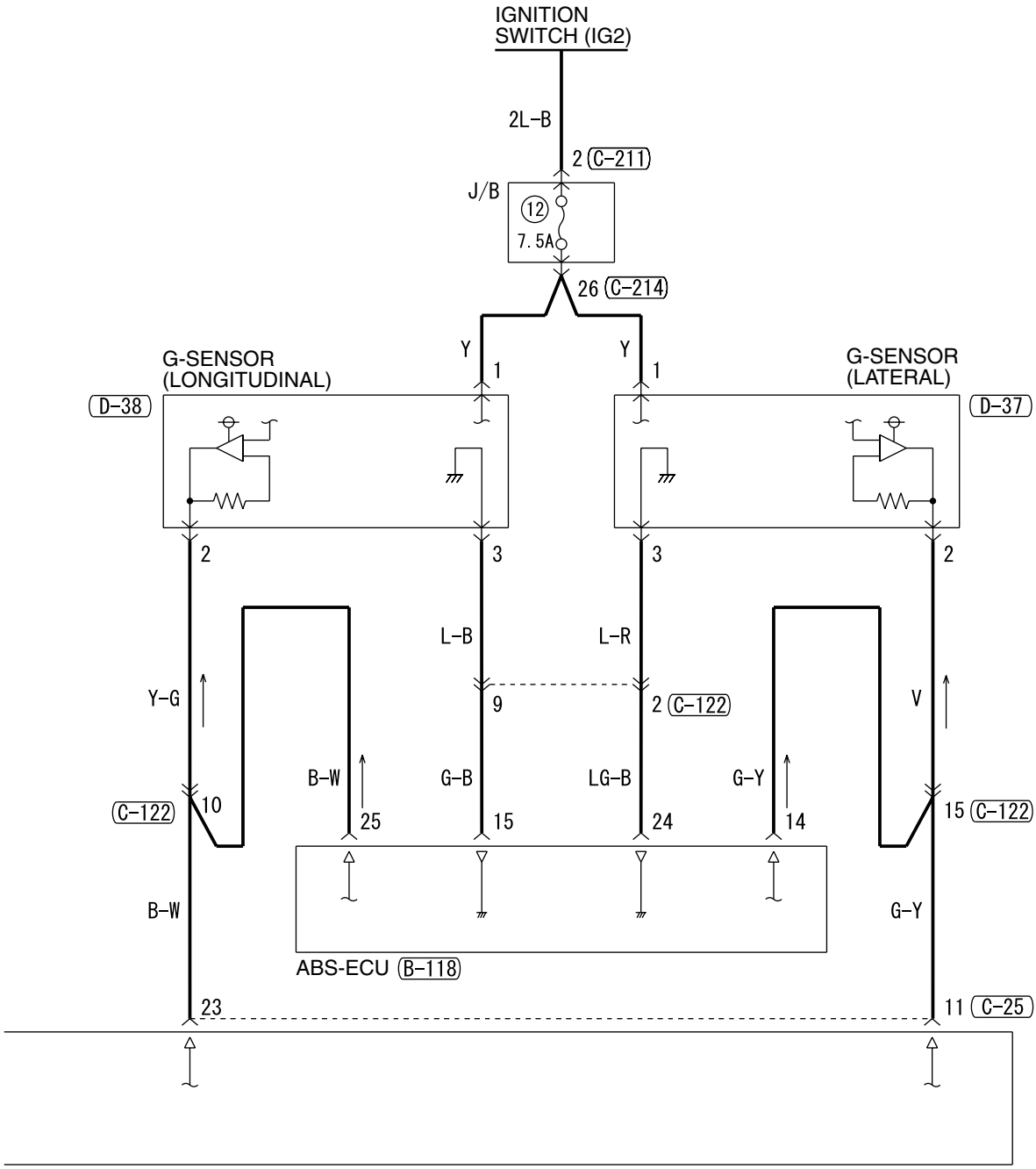

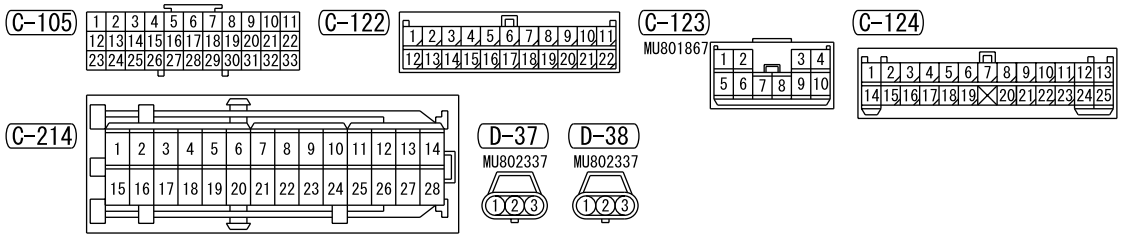

H4J15E18AB

ACD AND AYC <RH drive vehicles> (CONTINUED)

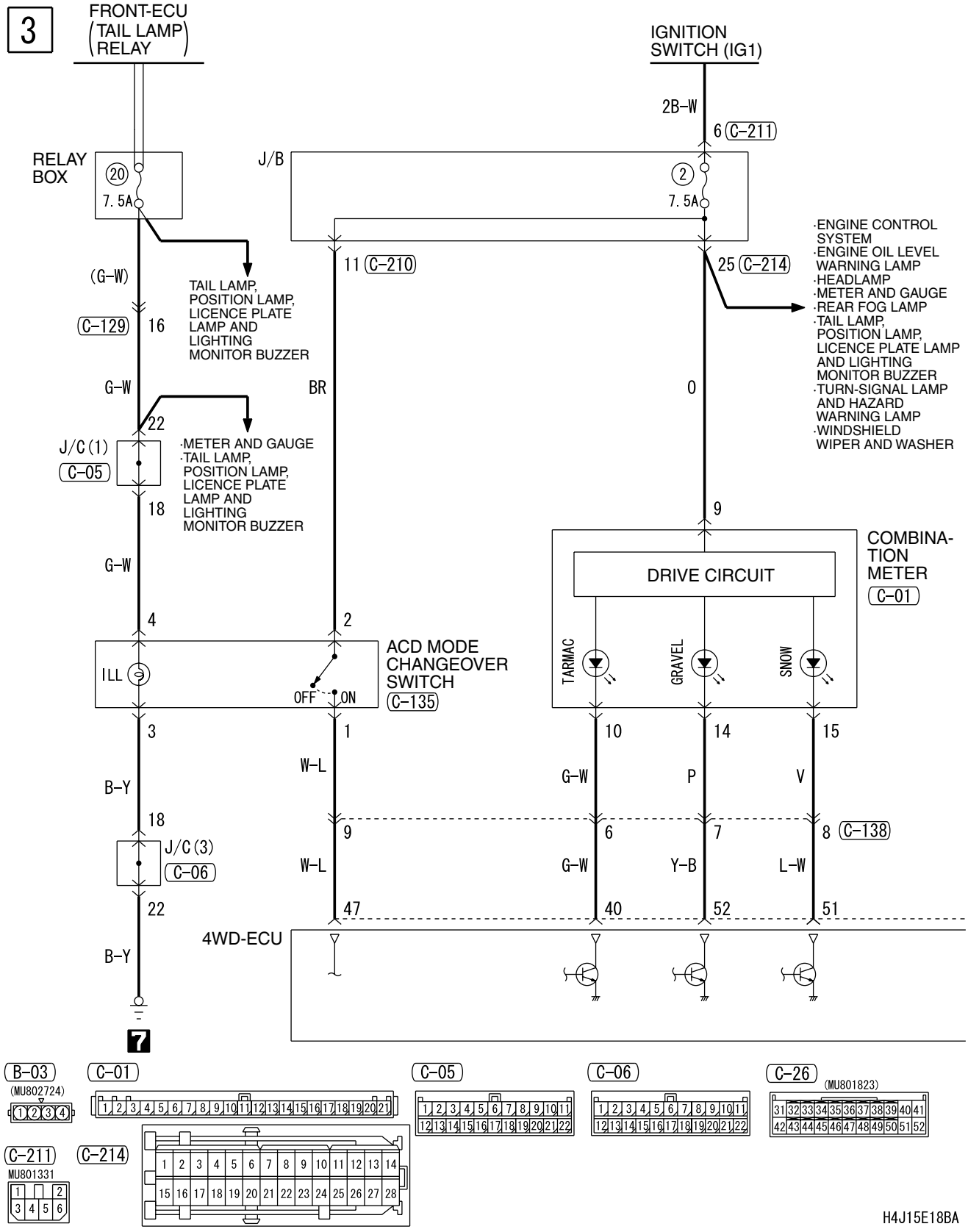

4

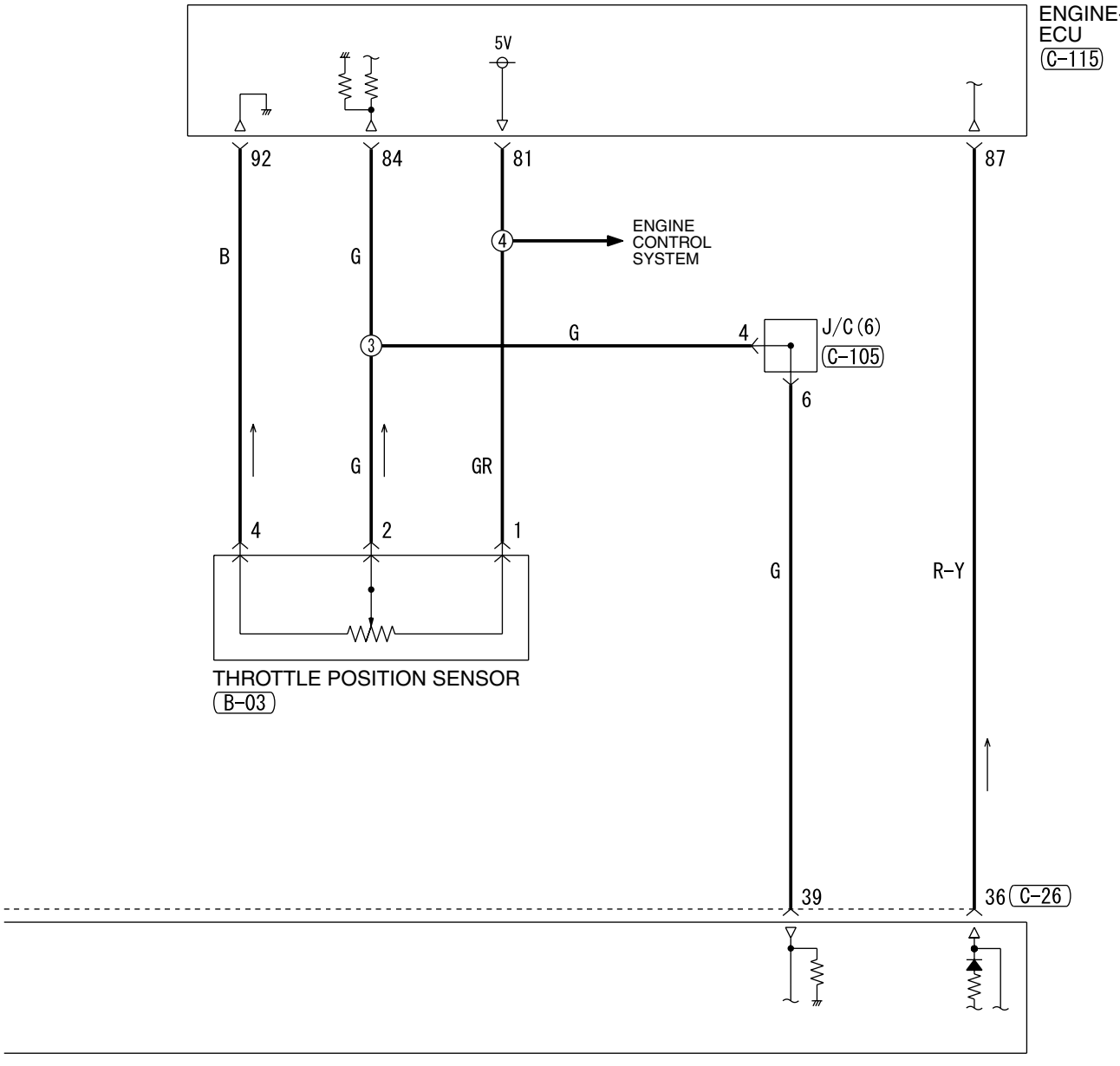

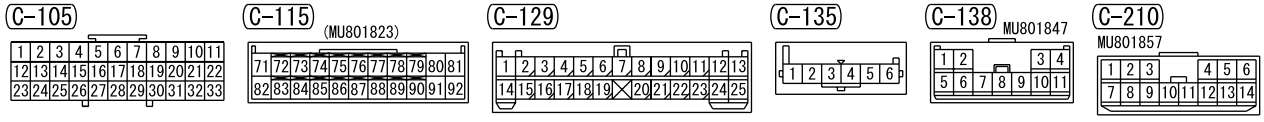

Wire colour code
B : Black LG : Light green G : Green L : Blue W : White Y : Yellow SB : Sky blue
BR : Brown O : Orange GR : Gray R : Red P : Pink V : Violet

H4J15E18BB

ACD AND AYC <RH drive vehicles> (CONTINUED)

5

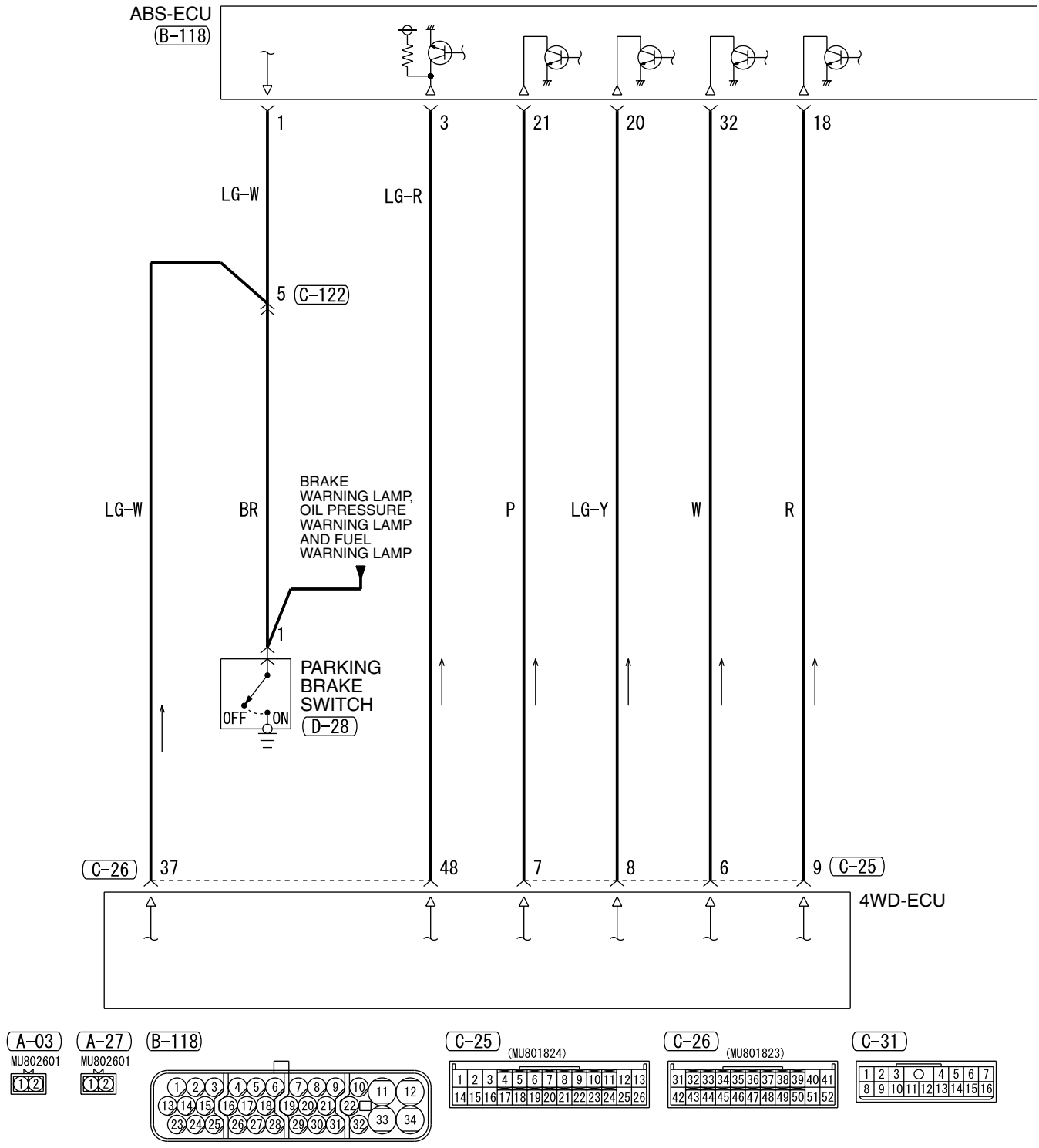

H4J15E18CA

6

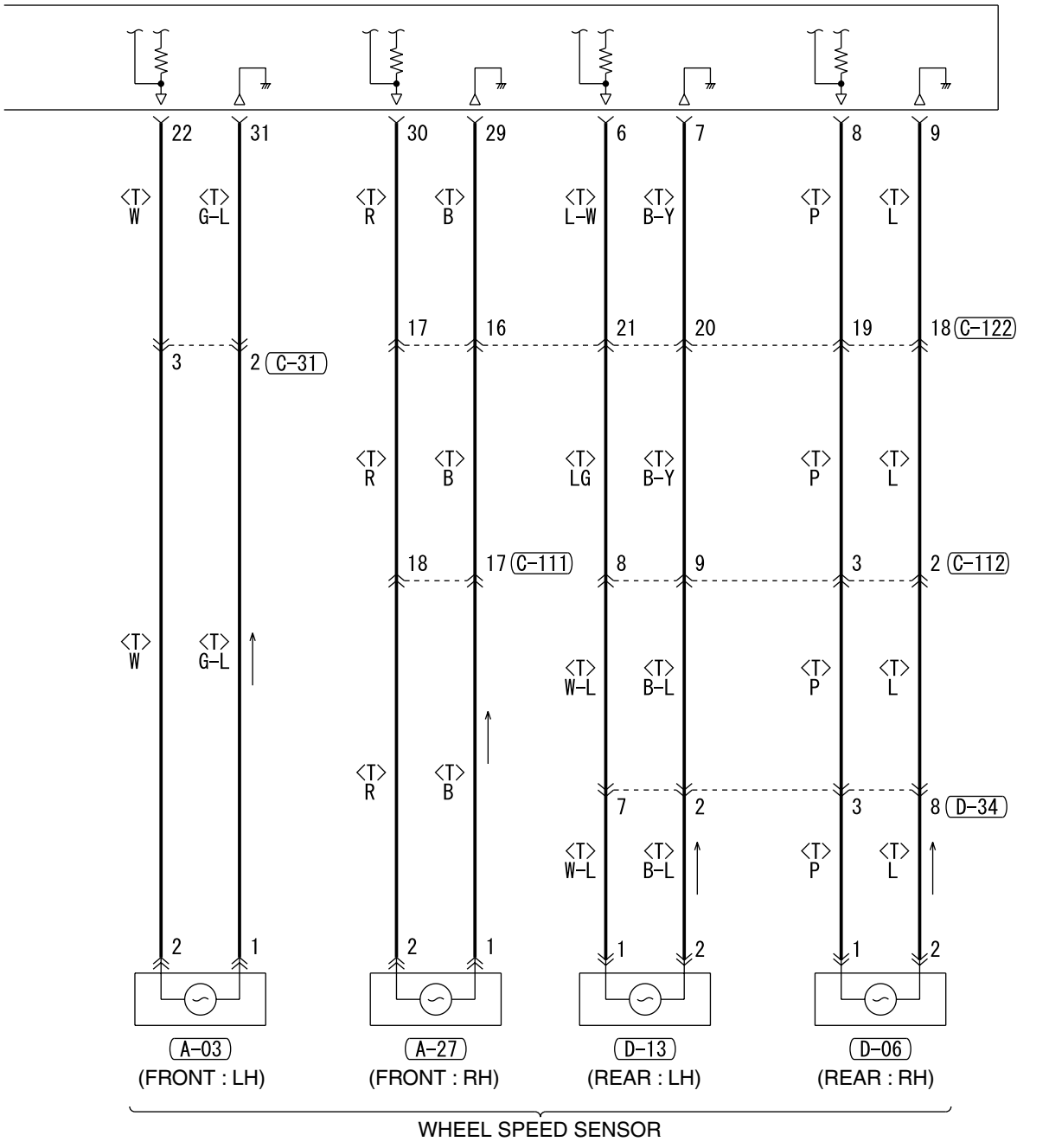

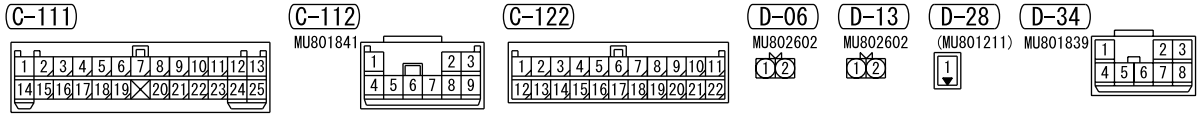

Wire colour code
B : Black LG : Light green G : Green L : Blue W : White Y : Yellow SB : Sky blue
BR : Brown O : Orange GR : Gray R : Red P : Pink V : Violet

H4J15E18CB

ACD AND AYC <RH drive vehicles> (CONTINUED)

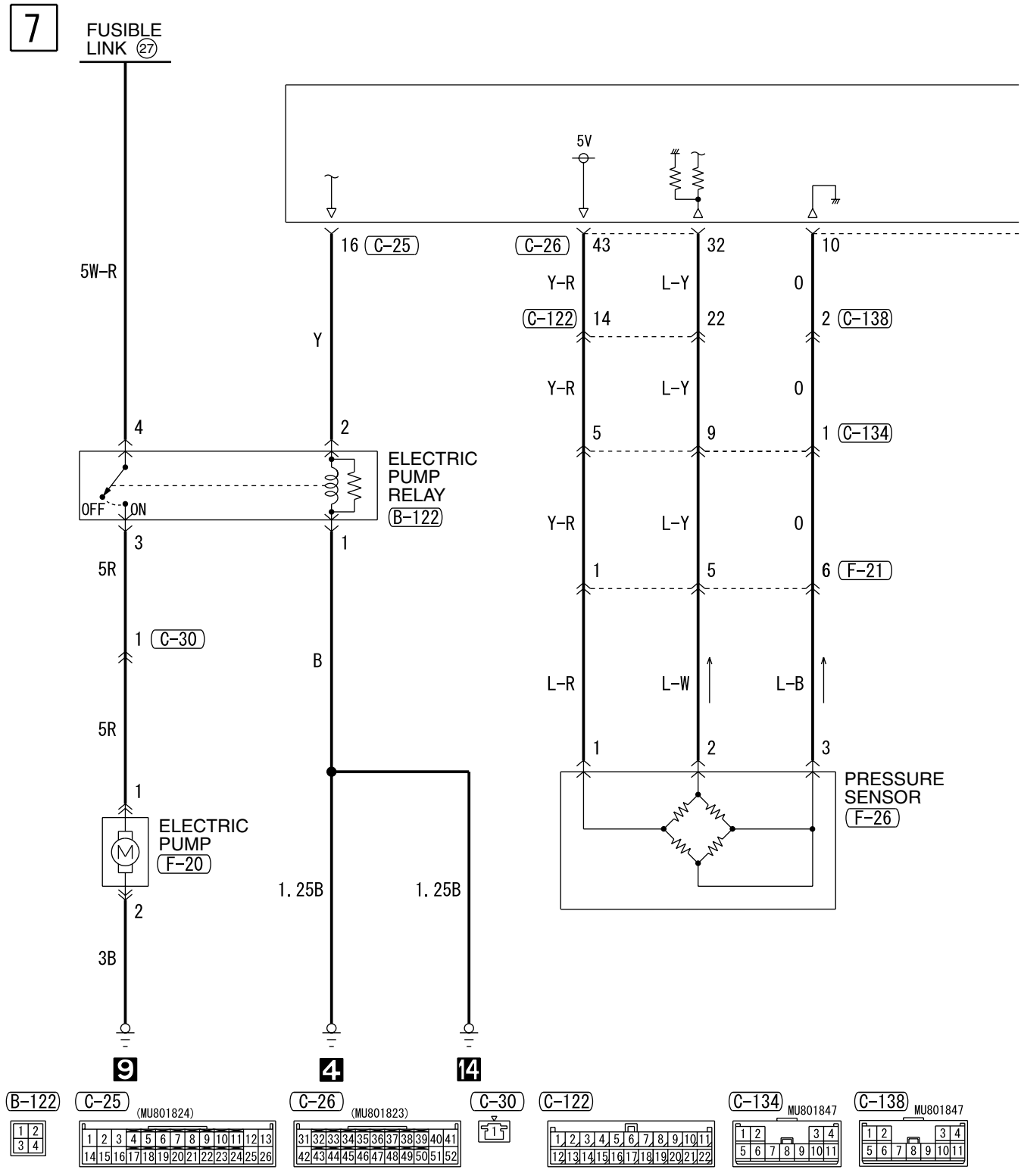

H4J15E18DA

8

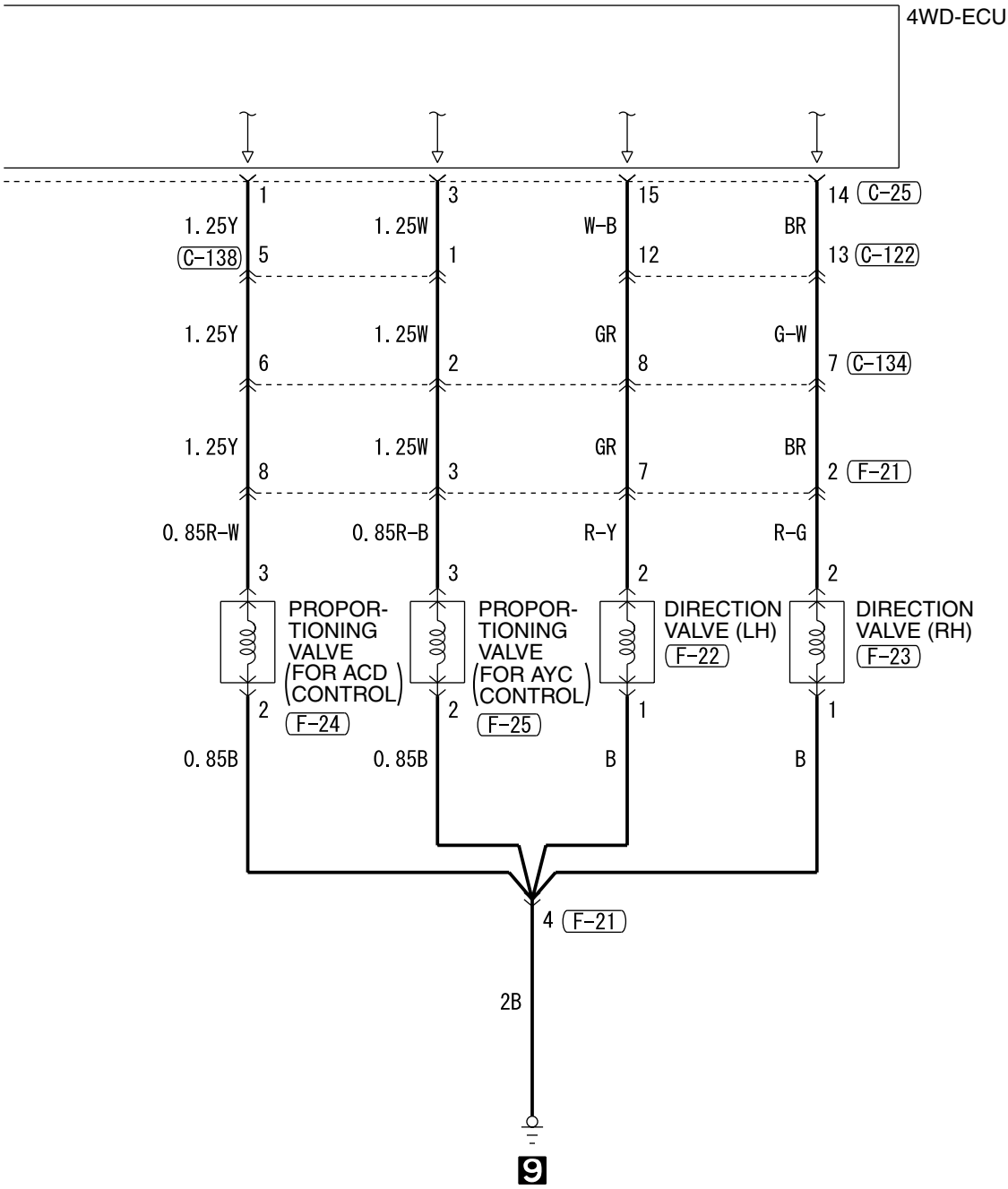

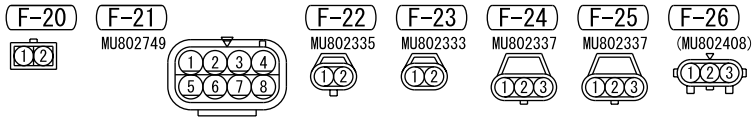

Wire colour code
B : Black LG : Light green G : Green L : Blue W : White Y : Yellow SB : Sky blue
BR : Brown O : Orange GR : Gray R : Red P : Pink V : Violet

H4J15E18DB

ACD AND AYC <RH drive vehicles> (CONTINUED)

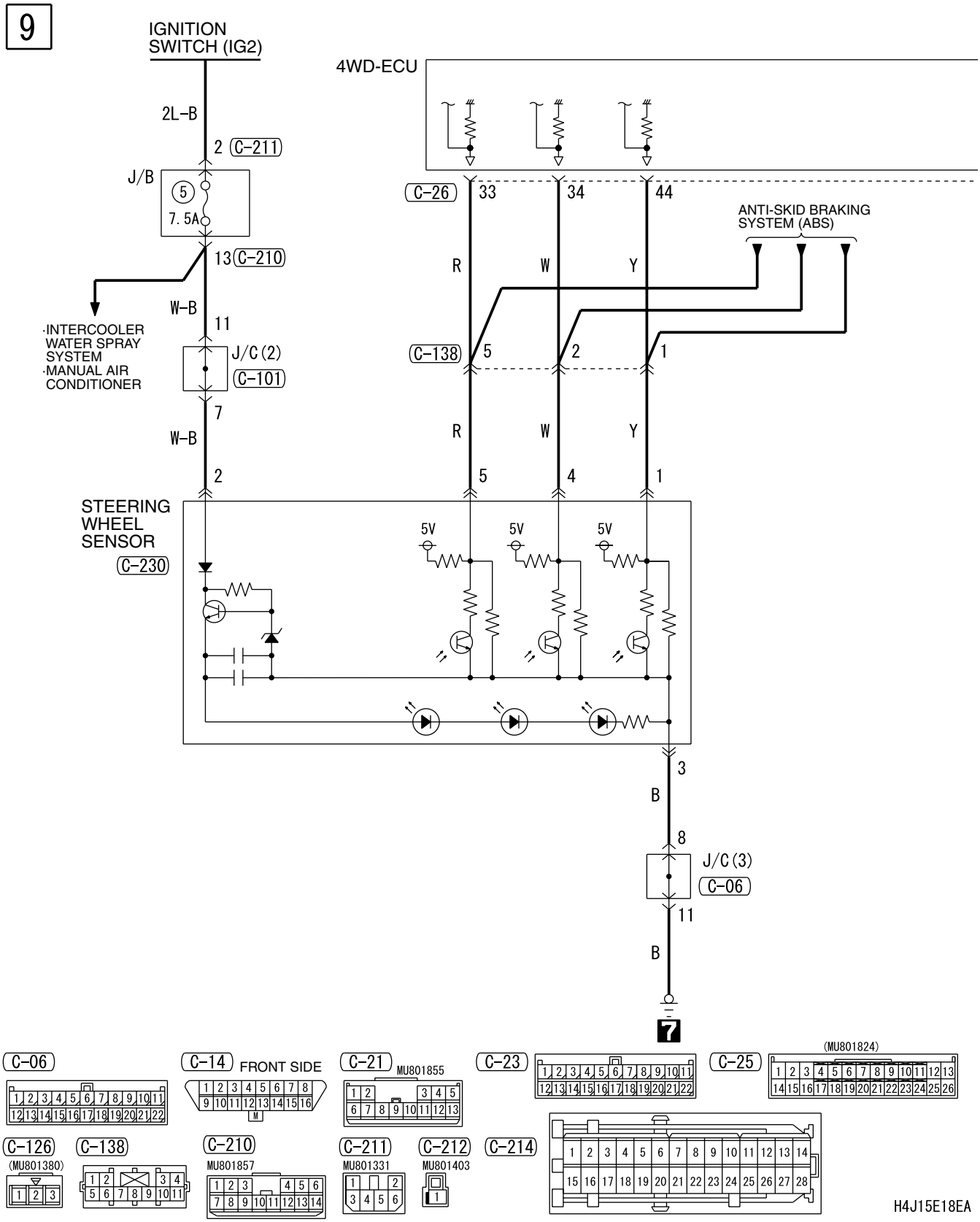

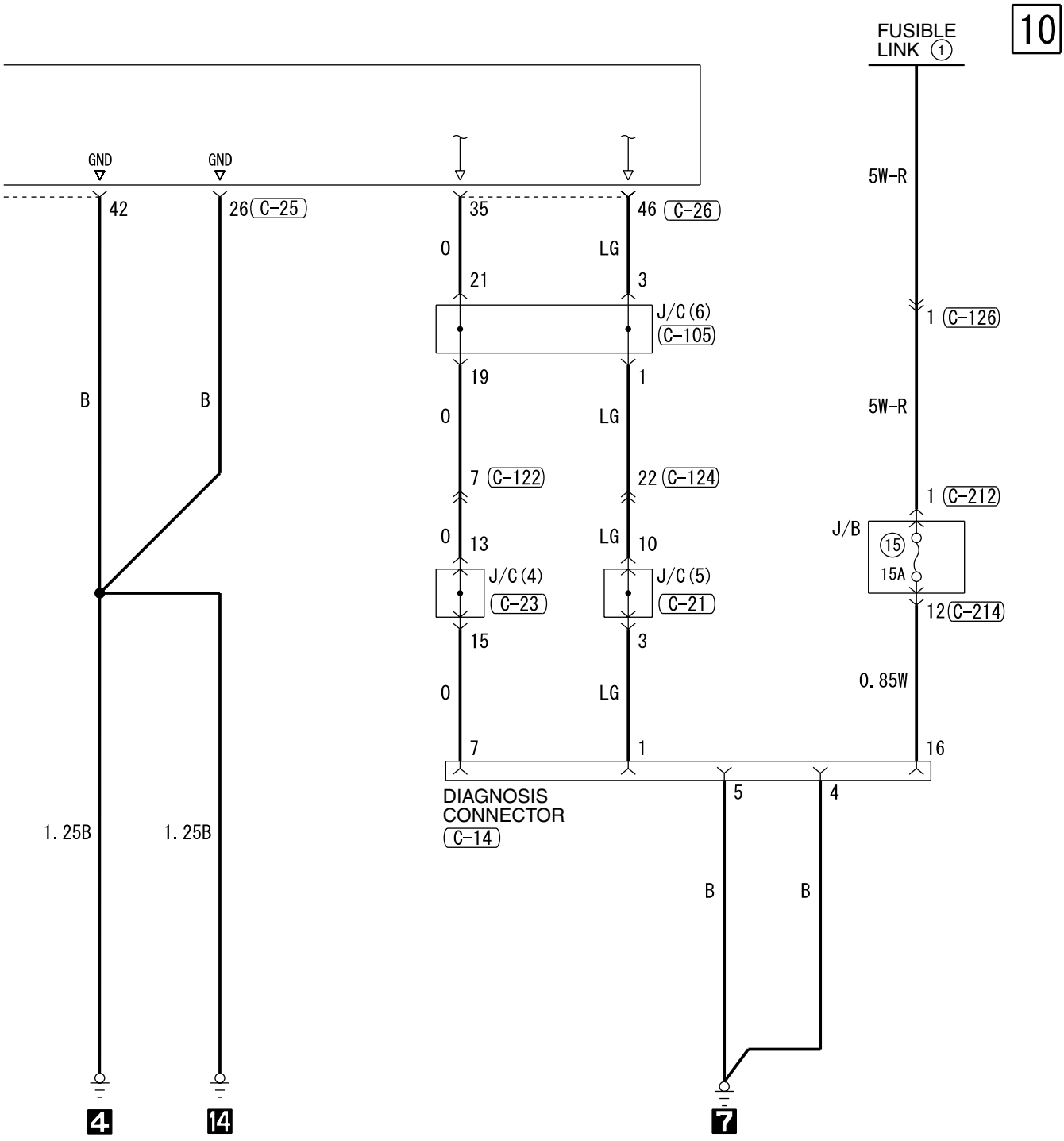

Wire colour code
B : Black LG : Light green G : Green L : Blue W : White Y : Yellow SB : Sky blue
BR : Brown O : Orange GR : Gray R : Red P : Pink V : Violet

H4J15E18EB

IMMOBILIZER SYSTEM

IMMOBILIZER SYSTEM <LH drive vehicles>

M3030013600144

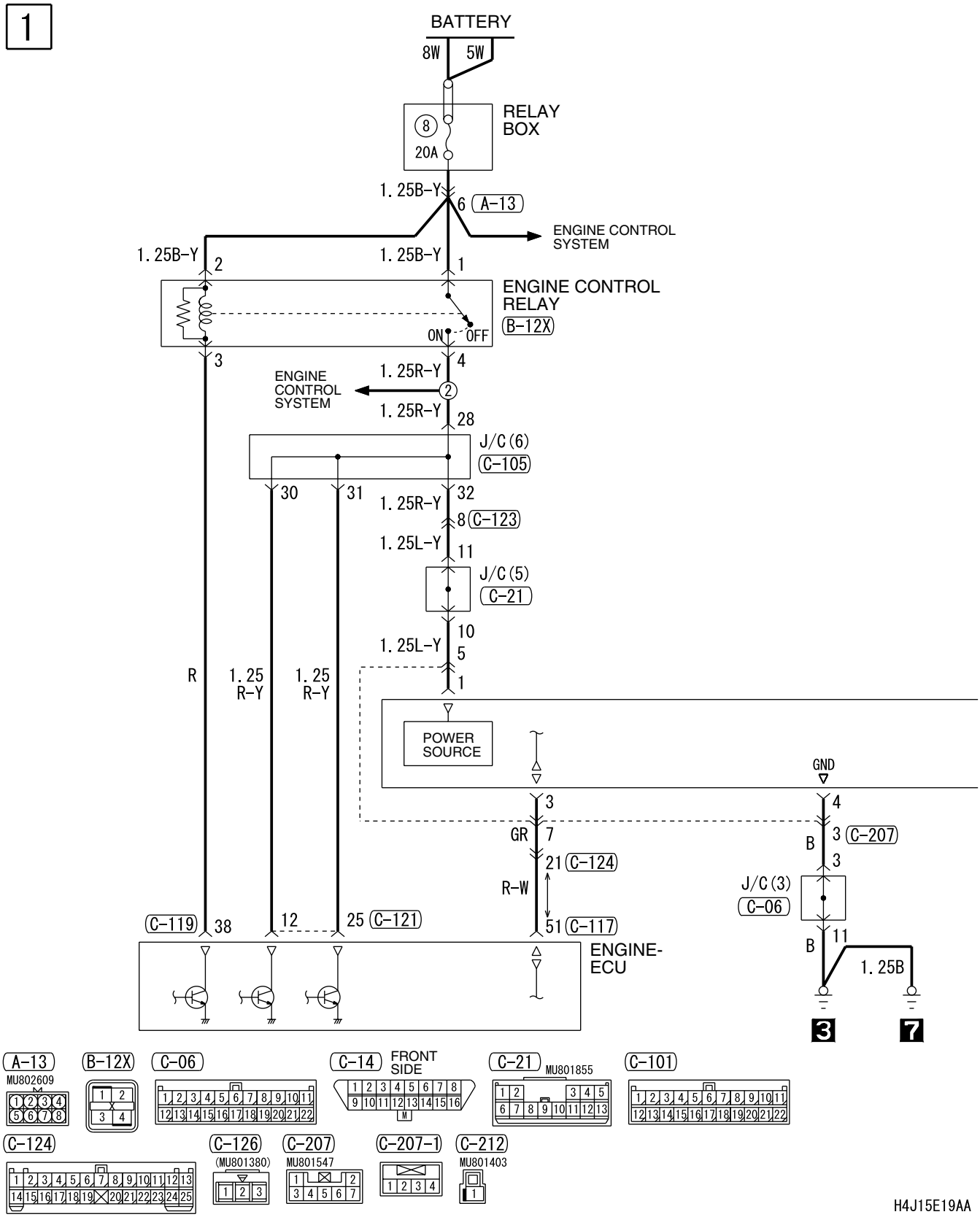

H4J15E19AA

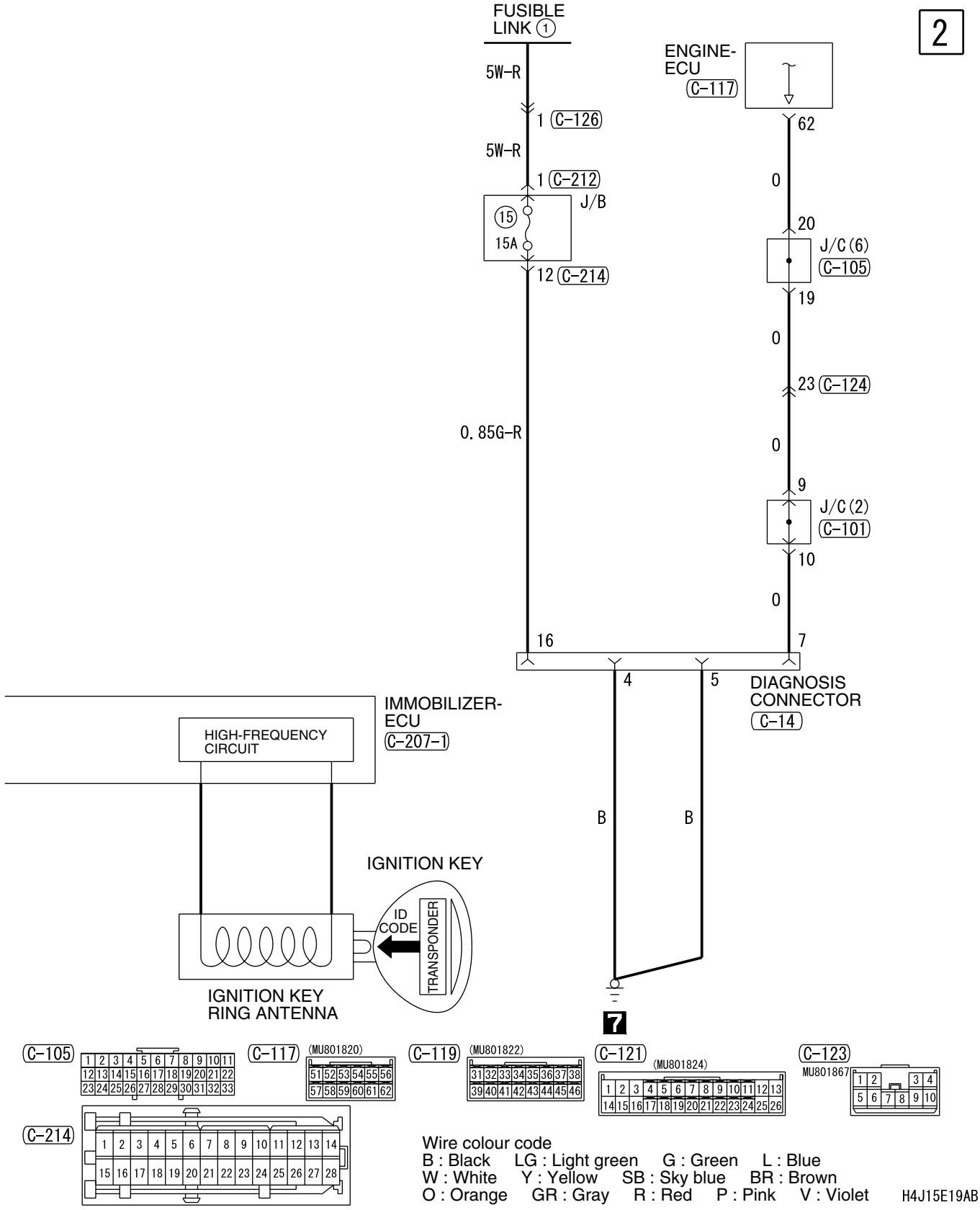
2
FUSIBLE LINK (1)
5W-R
1 (C-126)
5W-R
1 (C-212)
J/B
15
15A
12 (C-214)
0.85G-R
ENGINE-ECU
(C-117)
62
0
20
J/C (6)
(C-105)
19
0
23 (C-124)
0
9
J/C (2)
(C-101)
10
0
16
7
4
5
DIAGNOSIS CONNECTOR
(C-14)
B
B
IMMOBILIZER-ECU
(C-207-1)
HIGH-FREQUENCY CIRCUIT
IGNITION KEY
ID CODE
TRANSPONDER
IGNITION KEY RING ANTENNA
7
(C-105)
(C-117)
(MU801820)
(C-119)
(MU801822)
(C-121)
(MU801824)
(C-123)
MU801867
(C-214)
Wire colour code
B : Black LG : Light green G : Green L : Blue
W : White Y : Yellow SB : Sky blue BR : Brown
O : Orange GR : Gray R : Red P : Pink V : Violet
H4J15E19AB

IMMOBILIZER SYSTEM <RH drive vehicles>

M3030013600155

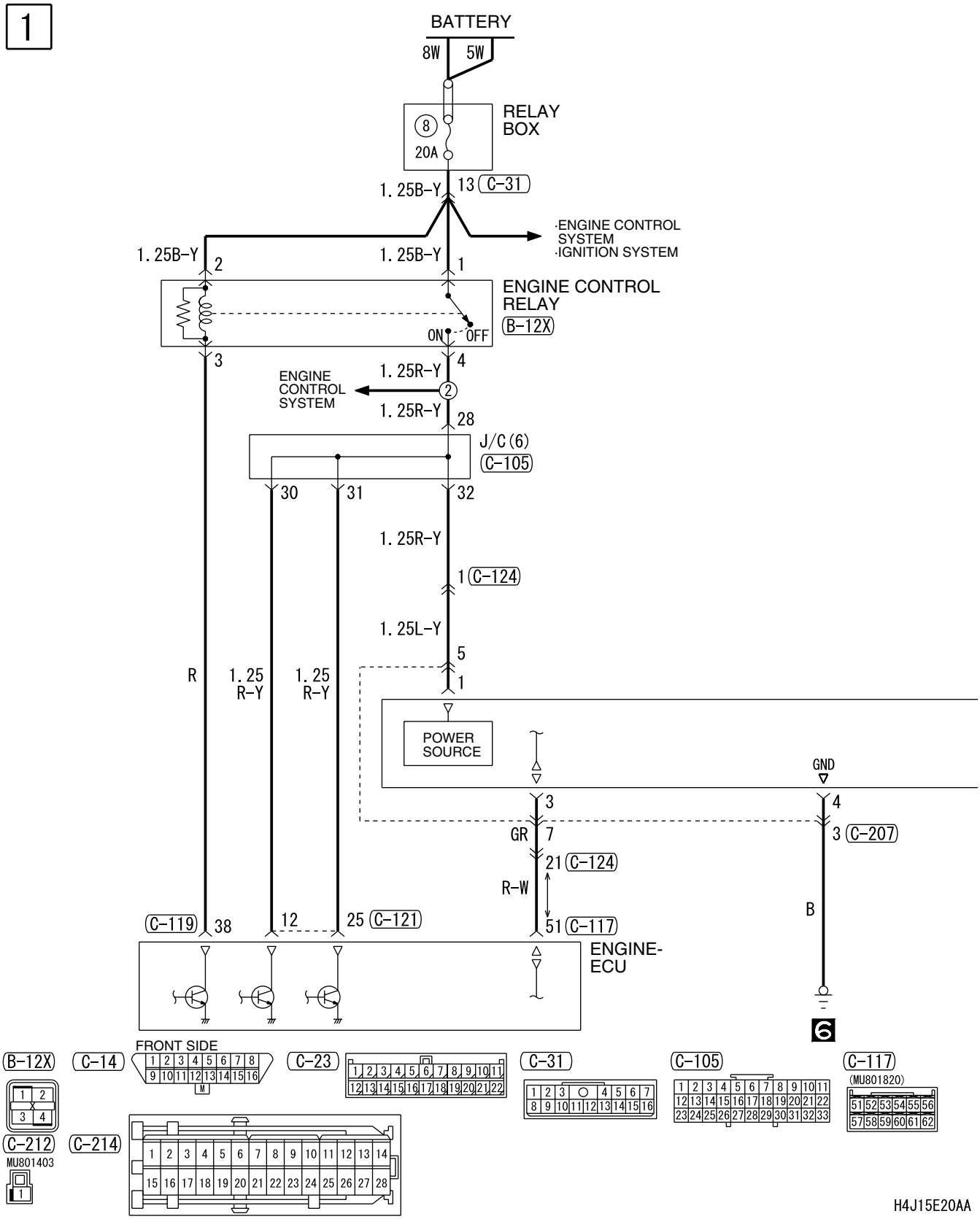

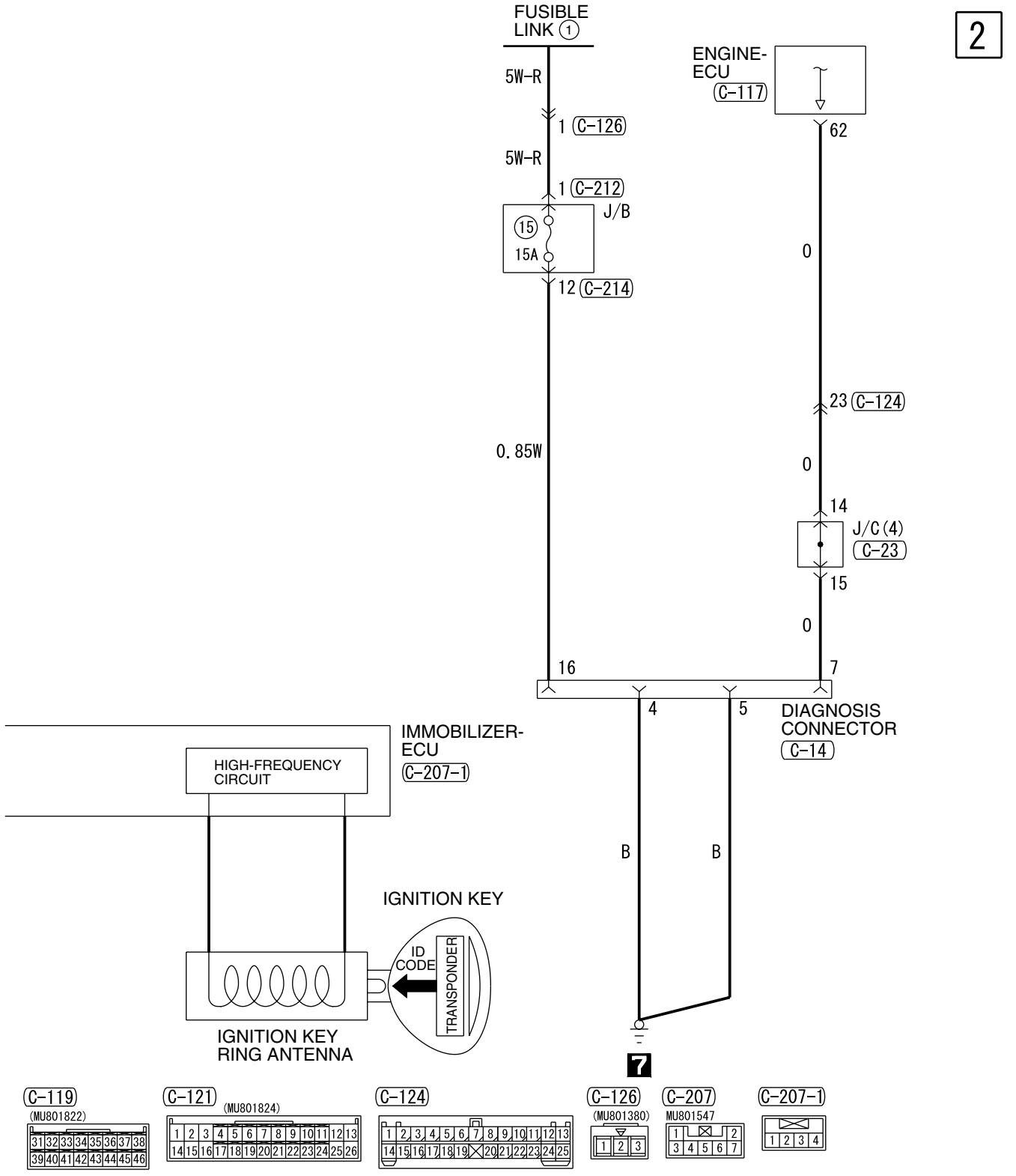

Wire colour code
B : Black LG : Light green G : Green L : Blue W : White Y : Yellow SB : Sky blue
BR : Brown O : Orange GR : Gray R : Red P : Pink V : Violet

H4J15E20AB

INTERCOOLER WATER SPRAY

INTERCOOLER WATER SPRAY <LH drive vehicles>

M3030018900021

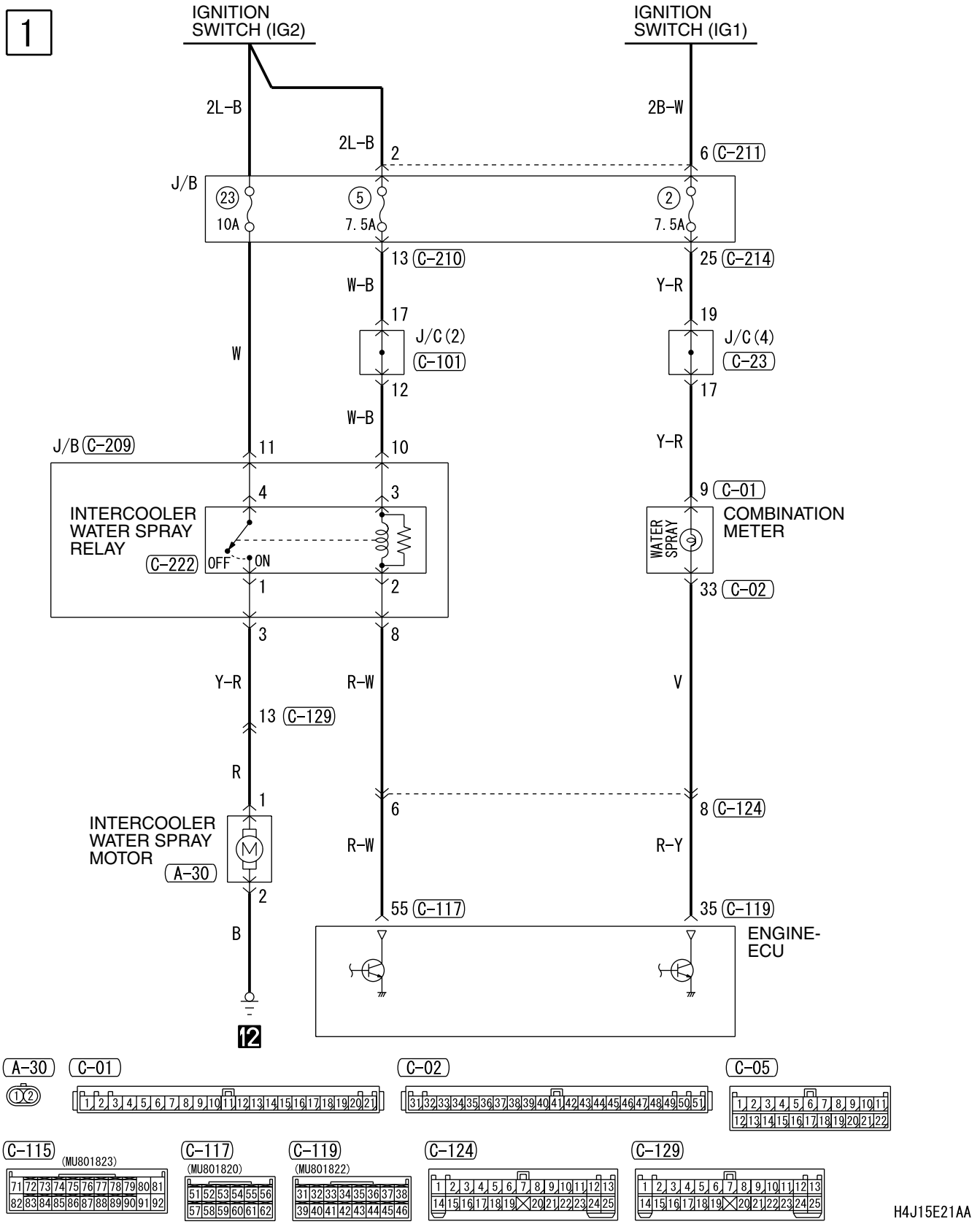

H4J15E21AA

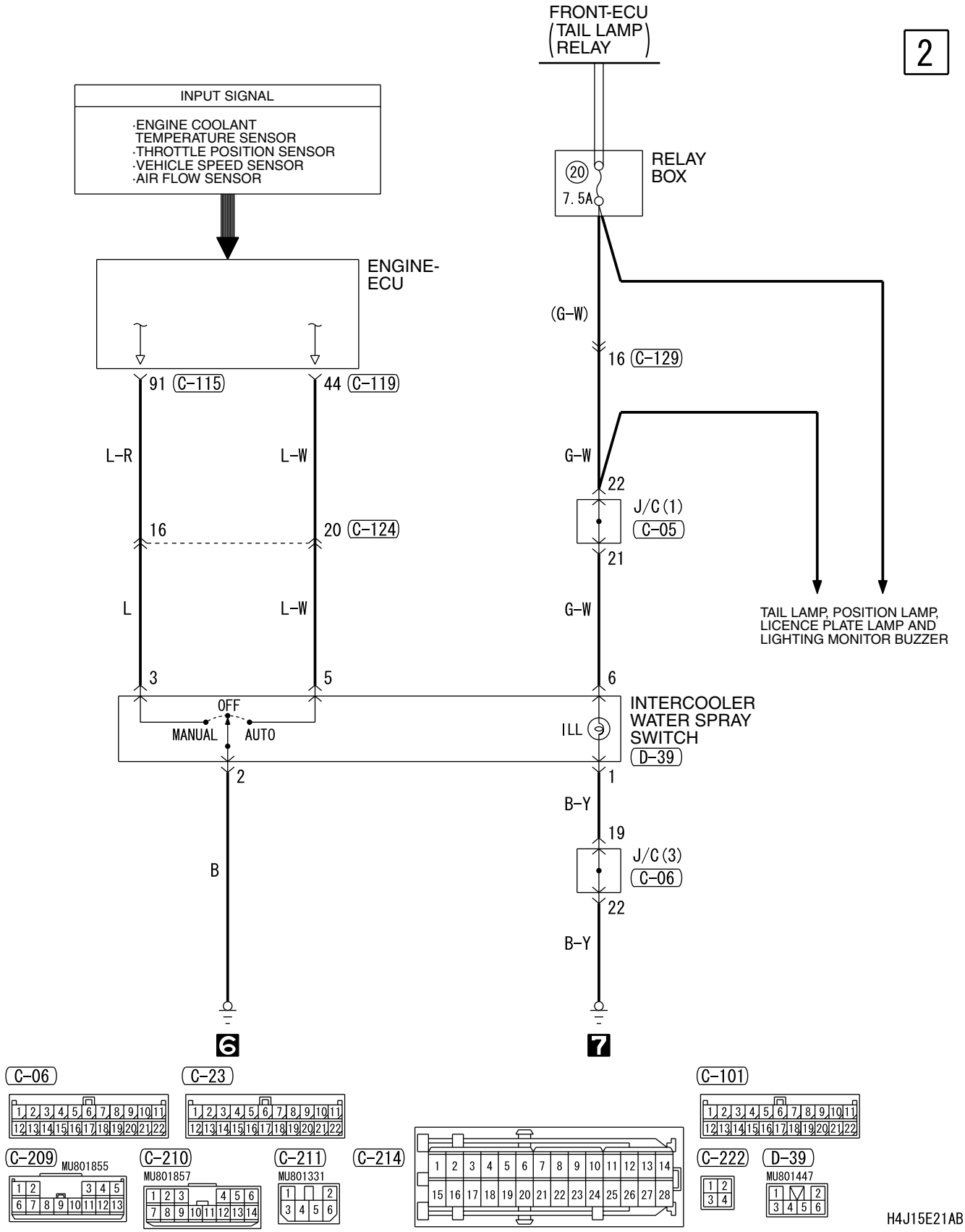
FRONT-ECU
(TAIL LAMP RELAY)
2
INPUT SIGNAL
·ENGINE COOLANT TEMPERATURE SENSOR
·THROTTLE POSITION SENSOR
·VEHICLE SPEED SENSOR
·AIR FLOW SENSOR
RELAY BOX
20
7.5A
ENGINE-ECU
(G-W)
16 C-129
91 C-115
44 C-119
L-R
L-W
G-W
22
J/C (1)
C-05
16
20 C-124
21
L
L-W
G-W
TAIL LAMP, POSITION LAMP, LICENCE PLATE LAMP AND LIGHTING MONITOR BUZZER
3
5
6
OFF
MANUAL
AUTO
ILL
INTERCOOLER WATER SPRAY SWITCH
D-39
2
1
B-Y
19
J/C (3)
C-06
B
22
B-Y
6
7
C-06
C-23
C-101
C-209
MU801855
C-210
MU801857
C-211
MU801331
C-214
C-222
D-39
MU801447
H4J15E21AB

INTERCOOLER WATER SPRAY <RH drive vehicles>

M3030018900032

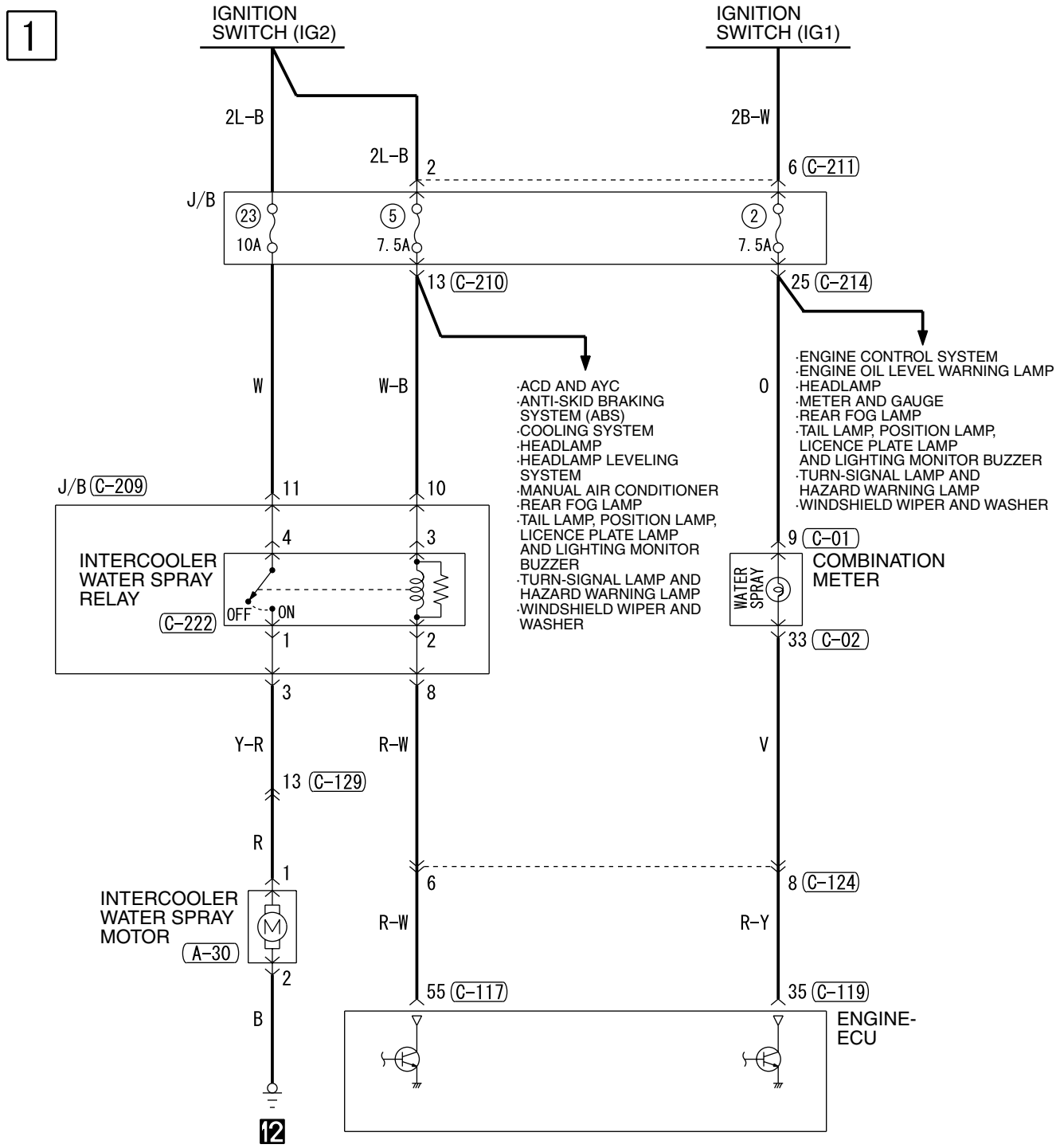

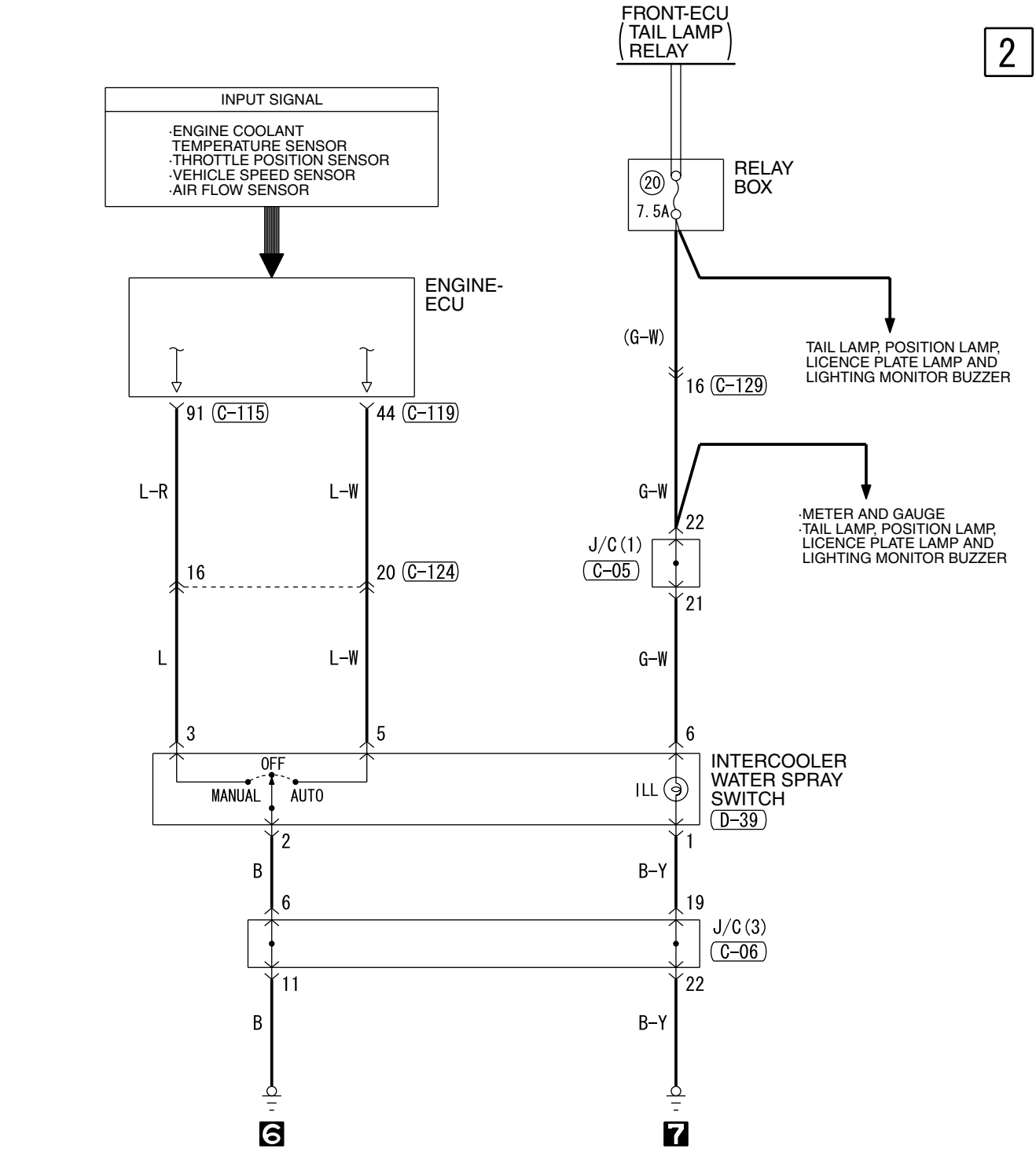

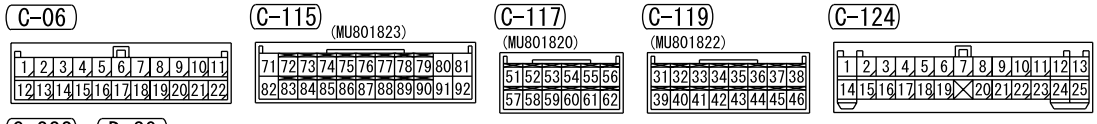

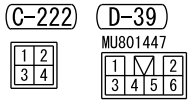

Wire colour code
B : Black LG : Light green G : Green L : Blue
W : White Y : Yellow SB : Sky blue BR : Brown
O : Orange GR : Gray R : Red P : Pink V : Violet

H4J15E22AB

NOTES