GROUP 33

FRONT SUSPENSION

CONTENTS

GENERAL DESCRIPTION 33-2

SERVICE SPECIFICATIONS 33-3

SPECIAL TOOLS 33-3

ON-VEHICLE SERVICE 33-4

FRONT WHEEL ALIGNMENT CHECK AND ADJUSTMENT 33-4

LOWER ARM BALL JOINT AXIAL PLAY CHECK 33-5

BALL JOINT DUST COVER CHECK 33-5

STRUT ASSEMBLY 33-6

REMOVAL AND INSTALLATION 33-6

INSPECTION 33-6

DISASSEMBLY AND ASSEMBLY 33-7

INSPECTION 33-9

LOWER ARM 33-10

REMOVAL AND INSTALLATION 33-10

INSPECTION 33-11

BALL JOINT DUST COVER REPLACEMENT 33-12

LOWER ARM PILLOW BALL BUSHING REPLACEMENT 33-12

STABILIZER BAR* 33-14

REMOVAL AND INSTALLATION 33-14

INSPECTION 33-16

CROSSMEMBER BAR 33-17

REMOVAL AND INSTALLATION 33-17

WARNINGS REGARDING SERVICING OF SUPPLEMENTAL RESTRAINT SYSTEM (SRS) EQUIPPED VEHICLES

⚠ WARNING

- ***Improper service or maintenance of any component of the SRS, or any SRS-related component, can lead to personal injury or death to service personnel (from inadvertent firing of the air bag) or to the driver and passenger (from rendering the SRS inoperative).***
- ***Service or maintenance of any SRS component or SRS-related component must be performed only at an authorized MITSUBISHI dealer.***
- ***MITSUBISHI dealer personnel must thoroughly review this manual, and especially its GROUP 52B - Supplemental Restraint System (SRS) before beginning any service or maintenance of any component of the SRS or any SRS-related component.***

NOTE
The SRS includes the following components: SRS-ECU, SRS warning lamp, air bag module, clock spring, and interconnecting wiring. Other SRS-related components (that may have to be removed/installed in connection with SRS service or maintenance) are indicated in the table of contents by an asterisk (*).

GENERAL DESCRIPTION

M1332000100311

A MacPherson strut independent suspension-type suspension is used for the front suspension. Aggressive use of special components that include Mitsubishi Motor's own inverted struts and forged aluminium parts reduces weight to create a suspension that gives superior performance made with competition use in mind.

CONSTRUCTION DIAGRAM

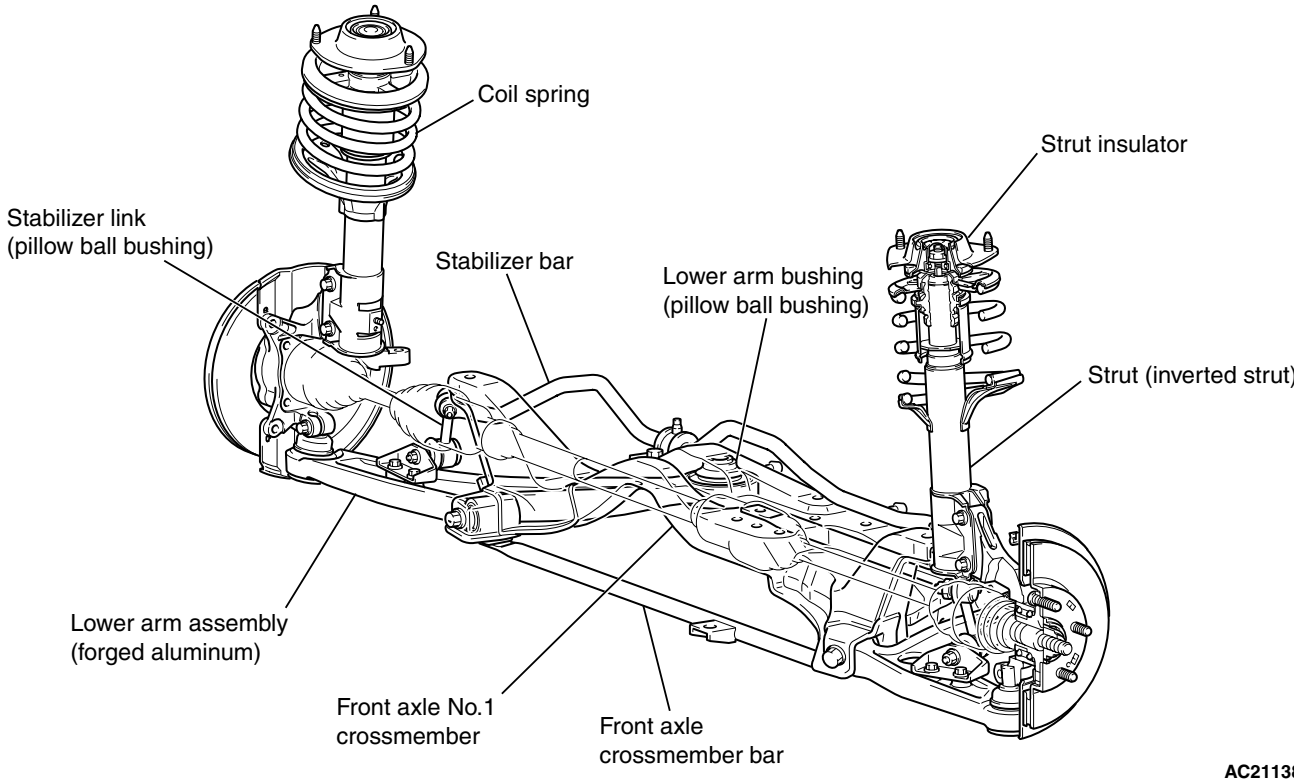

AC211383AC

SPECIFICATIONS

COIL SPRING

Item	Specification
Wire diameter mm	14
Average diameter mm	155
Free length mm	286

SERVICE SPECIFICATIONS

M1332000300456

Item		Specification
Toe-in mm		0 ± 2
Steering angle	Inner wheel	31°45' ± 1°30'
	Outer wheel (reference)	27°15'
Camber (selectable from 2 options)		–1°00' ± 30'* or –2°00' ± 30' (Left/right deviation within 30')
Caster		3°55' ± 30' (Left/right deviation within 30')
Kingpin inclination		13°45' ± 1°30'
Lower arm ball joint breakaway torque N·m		0.5 – 3.4
Lower arm pillow ball bushing rotation starting torque N·m		0.5 – 3.0
Stabilizer link ball joint turning torque N·m		1.7 – 3.2

*NOTE: *: Default factory setting*

SPECIAL TOOLS

M1332000600350

Tool	Number	Name	Use
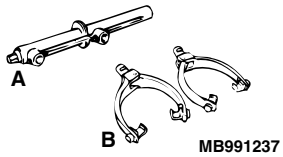	A: MB991237 B: MB991238	A: Spring compressor body B: Arm set	Coil spring compression
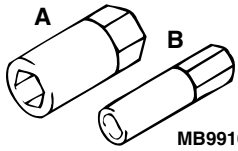	MB991680 A: MB991681 B: MB991682	Wrench set A: Wrench B: Socket	Strut assembly disassembly and reassembly
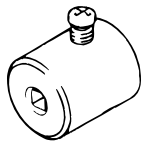	MB991006	Preload socket	Lower arm ball joint rotation starting torque measurement
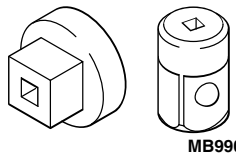	MB990326	Preload socket	Lower arm ball bushing rotation starting torque measurement
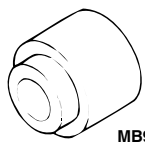	MB990800	Ball joint dust cover installer	Lower arm ball joint dust cover press-in

Tool	Number	Name	Use
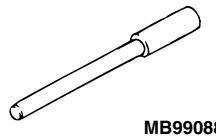 MB990883	MB990651	Bar	Lower arm pillow ball bushing removal and press-fitting
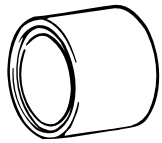	MB991816	Bushing remover & installer base	
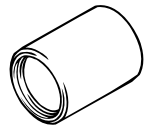 MB991576	MB991576	Base	
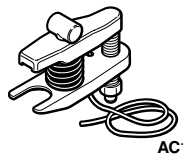 AC106827	MB991897	Ball joint remover	Knuckle and tie rod end ball joint disconnection *NOTE: Steering linkage puller (MB990635 or MB991113) is also available to disconnect knuckle and tie rod end ball joint.*

ON-VEHICLE SERVICE

FRONT WHEEL ALIGNMENT CHECK AND ADJUSTMENT

M1331000900541

Measure wheel alignment with alignment equipment on a level surface. The front suspension, steering system, wheels, and tires should be serviced to normal condition before measuring wheel alignment.

TOE-IN

Standard value: 0 ± 2 mm

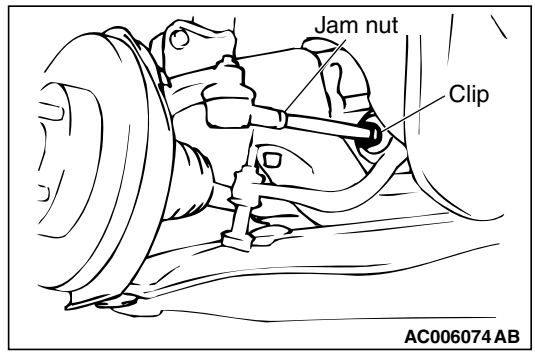

1. Adjust the toe-in by undoing the clip and jam nut, and turning the left and right tie rod turnbuckles by the same amount (in opposite directions).

   NOTE: The toe will move out as the left turnbuckle is turned toward the front of the vehicle and the right turnbuckle is turned toward the rear of the vehicle.
2. Install the clip and tighten the jam nut to the specified torque.

   Tightening torque: 52 ± 2 N·m
3. Confirm that the toe-in is at the standard value.
4. Use a turning radius gauge to check that the steering angle is at the standard value.

   Standard value:

Inner wheel	31°45’ ± 1°30’
Outer wheel (for reference)	27°15’

CAMBER, CASTER AND KINGPIN INCLINATION

Standard value:

Item	Specification
Camber (Selectable from 2 options)	-1°00'*1, *2 ± 30'* or -2°00' ± 30'*1
Caster	3°55' ± 30'*1
Kingpin inclination	13°45' ± 1°30'

NOTE:

1. **1: difference between right and left wheels must be less than 30'*
2. **2: default factory setting*
3. *Caster and kingpin inclination are preset at the factory and cannot be adjusted.*

SELECTION THE CAMBER

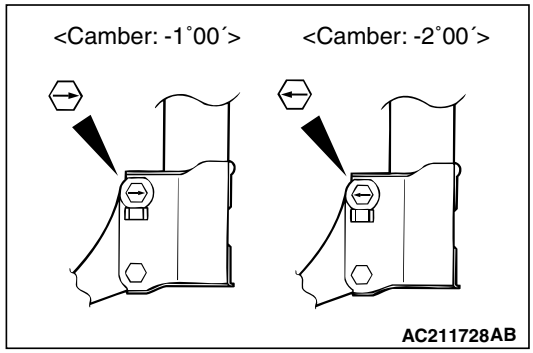

Select the camber by the installation direction of the arrow of the connecting bolt of the strut assembly and the knuckle.

- -1°00' ± 30': Install the bolt turning the arrow in the direction of inside the vehicle.
- -2°00' ± 30': Install the bolt turning the arrow in the direction of outside the vehicle.

LOWER ARM BALL JOINT AXIAL PLAY CHECK

M1332010900051

1. Raise the vehicle.
2. Remove the stabilizer bar from the lower arm assembly.
3. Move the lower arm up and down with your hands to check for excessive play in the axial direction of the ball joint. If there is excessive play, replace the lower arm assembly.

BALL JOINT DUST COVER CHECK

M1332008600398

1. Press the dust cover with your finger to check that there are no cracks or damage in the dust cover.
2. If the dust cover is cracked or damaged, replace the lower arm assembly.

   NOTE: If the dust cover is cracked or damaged, it is possible that there may also be damage to the ball joint.

STRUT ASSEMBLY

REMOVAL AND INSTALLATION

M1332001100422

Post-installation Operation
- Front Wheel Alignment Check and Adjustment (Refer to P.33-4).

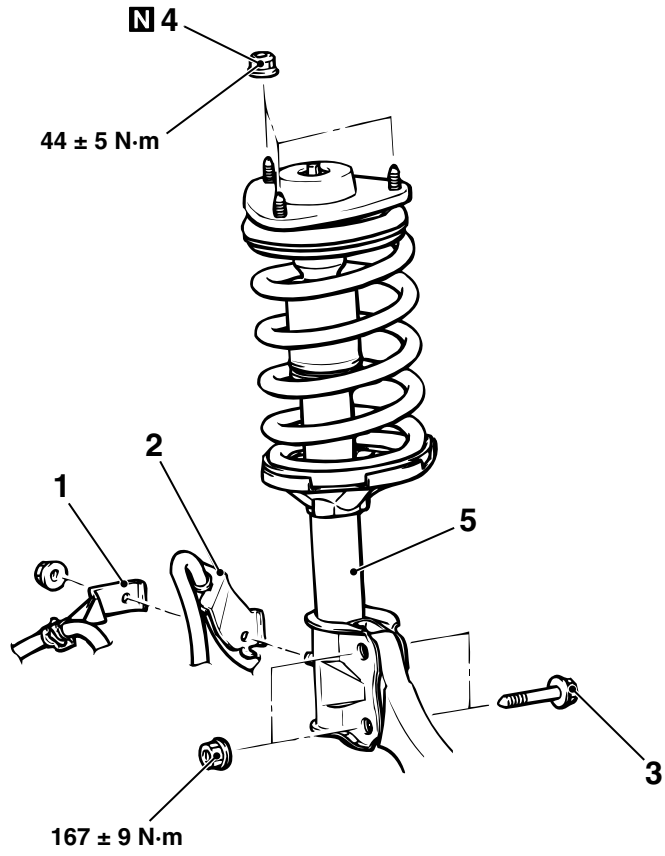

AC310743AB

Removal steps
1. Front wheel speed sensor harness bracket
2. Brake hose bracket
3. Knuckle connection
4. Strut mounting nut
5. Strut assembly

INSPECTION

M1332001200300

- Check for oil leaks from the strut assembly.
- Check the strut assembly for damage or deformation.

DISASSEMBLY AND ASSEMBLY

M1332001300437

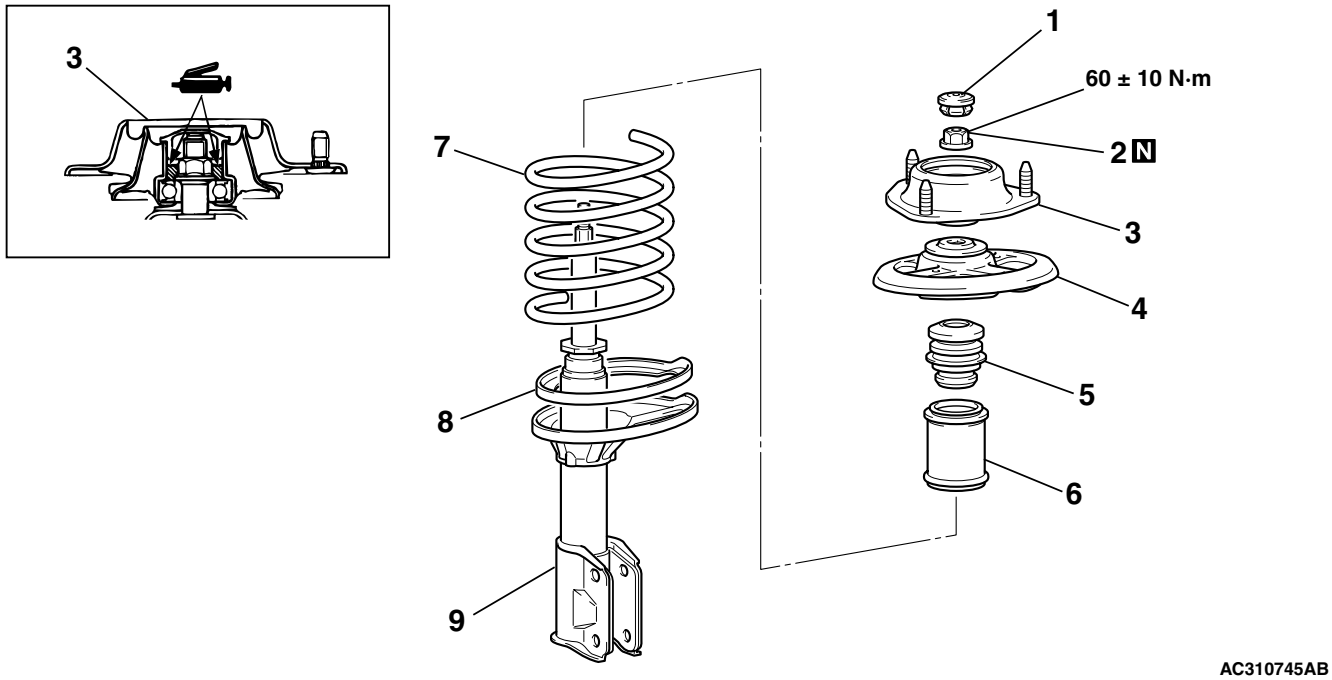

Disassembly steps

	1.	Strut cover
⌘<A> ⌘>A<	2.	Strut nut
	3.	Strut insulator
	4.	Spring upper seat
	5.	Strut damper
	6.	Strut cover
	7.	Coil spring
	8.	Spring lower pad
⌘<B>	9.	Front suspension strut

DISASSEMBLY SERVICE POINTS

<<A>> STRUT NUT REMOVAL

⚠ CAUTION

- **Do not tighten the bolt of special tool spring compressor body (MB991237) too tight. Special tool spring compressor body (MB991237) will be broken if the allowable tightening torque of 74 N·m is exceed.**
- **Install special tool arm set (MB991238) evenly, and so that the maximum length will be attained within the installation range.**
- **Do not use an impact wrench to tighten the bolt of special tool spring compressor body (MB991237), otherwise the special tool will break.**

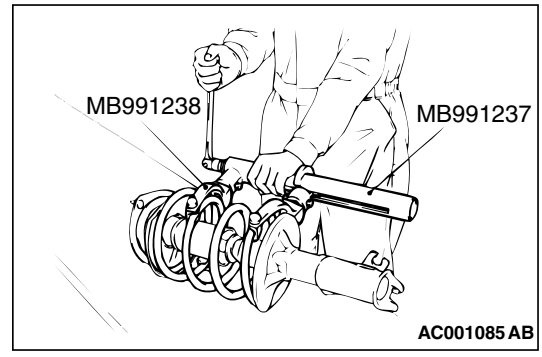

1. Use following special tools to compress the coil spring.
   - MB991237: Spring Compressor Body
   - MB991238: Arm Set

⚠ WARNING

Do not use an impact wrench to remove the strut nut.

- ***Vibration of the impact wrench will cause special tools (MB991237 and MB991238) to slip and cause personal injury.***
- ***Vibration of the impact wrench will cause the valve inside the strut to drop out.***

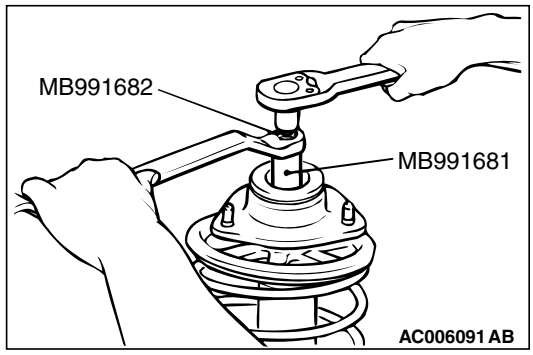

2. Use following special tools to secure the strut, and then remove the self-locking nut.
   - MB991681: Wrench
   - MB991682: Socket

<<B>> FRONT SUSPENSION STRUT REMOVAL

⚠ WARNING

Wear goggles when drilling to protect your eyes from flying metal debris.

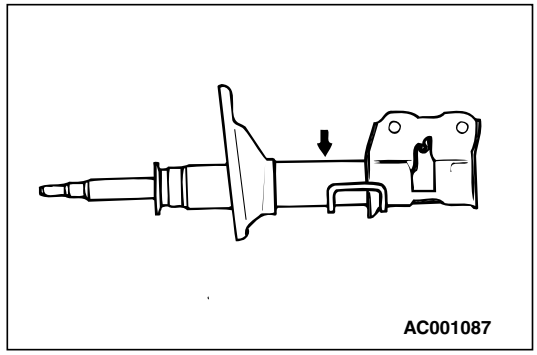

The gas must be discharged from the front suspension strut assembly before discarding it. Place the strut horizontally with its piston rod extended. Then drill a hole of approximately 3 mm in diameter at the location shown in the illustration and discharge the gas.

ASSEMBLY SERVICE POINTS

>>A<< STRUT NUT INSTALLATION

1. Ensure that the bearing is seated correctly.

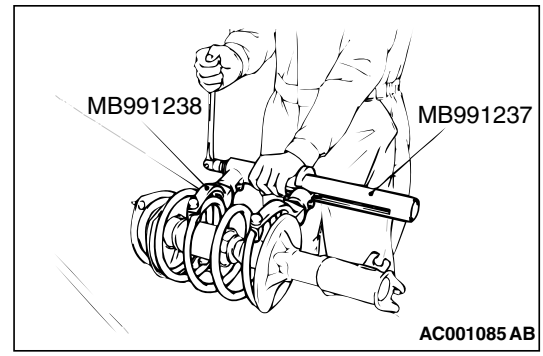

2. Install following special tools to the strut assembly same as its removal.
   - MB991237: Spring Compressor Body
   - MB991238: Arm Set

⚠ CAUTION

Do not use an impact wrench to tighten the bolt of special tool spring compressor body (MB991237), otherwise the special tool will break.

3. While the coil spring is being compressed by the special tools, temporarily tighten the strut nut.

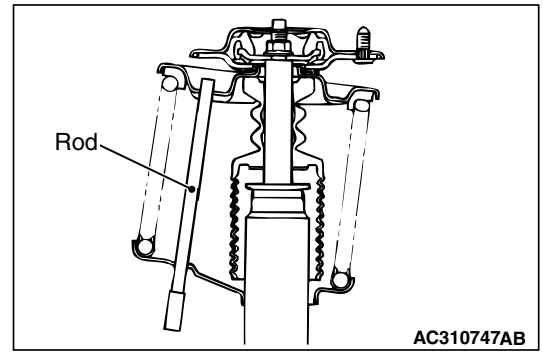

4. Align the hole in the strut spring lower seat with the hole in the upper spring seat.

   NOTE: Using a rod as shown facilitates the alignment.

5. Correctly align both ends of the coil spring with the grooves in the spring seat, and then loosen the special tools.

⚠ CAUTION
Do not use an impact wrench to tighten the strut nut, otherwise the strut nut will be damaged. Vibration of the impact wrench will cause the valve inside the strut to dropout.

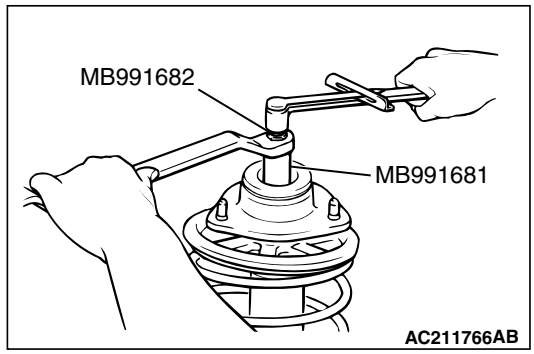

6. Using following special tools, tighten the strut nut to 60 ± 10 N·m.
   - MB991681: Wrench
   - MB991682: Socket

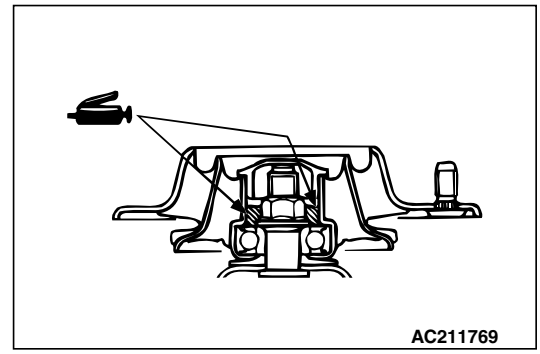

7. After tightening the strut nut, fill the multi purpose grease to the bearing part of strut insulator.

INSPECTION

M1332001400229

- Check the strut bearing for wear or rust.
- Check the rubber parts for damage or deterioration.
- Check the coil spring for deformation, deterioration or damage.
- Check the front suspension strut for deformation.

LOWER ARM

REMOVAL AND INSTALLATION

M1332001600405

⚠ CAUTION

- **During maintenance, take care not to contact the parts or tools to the caliper because the paint of caliper will be scratched. And if there is brake fluid on the caliper, wipe off quickly.**
- ***: Indicates parts which should be temporarily tightened, and then fully tightened with the vehicle on the ground in an unladen condition.**

Post-installation Operation
- Check the Dust Cover for Cracks or Damage by Pushing it with Your Finger.
- Front Wheel Alignment Check and Adjustment (Refer to P.33-4).

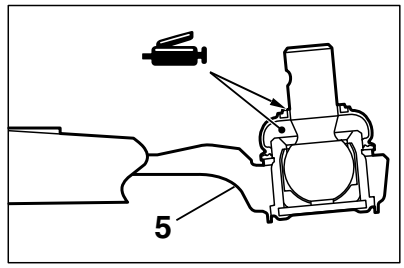

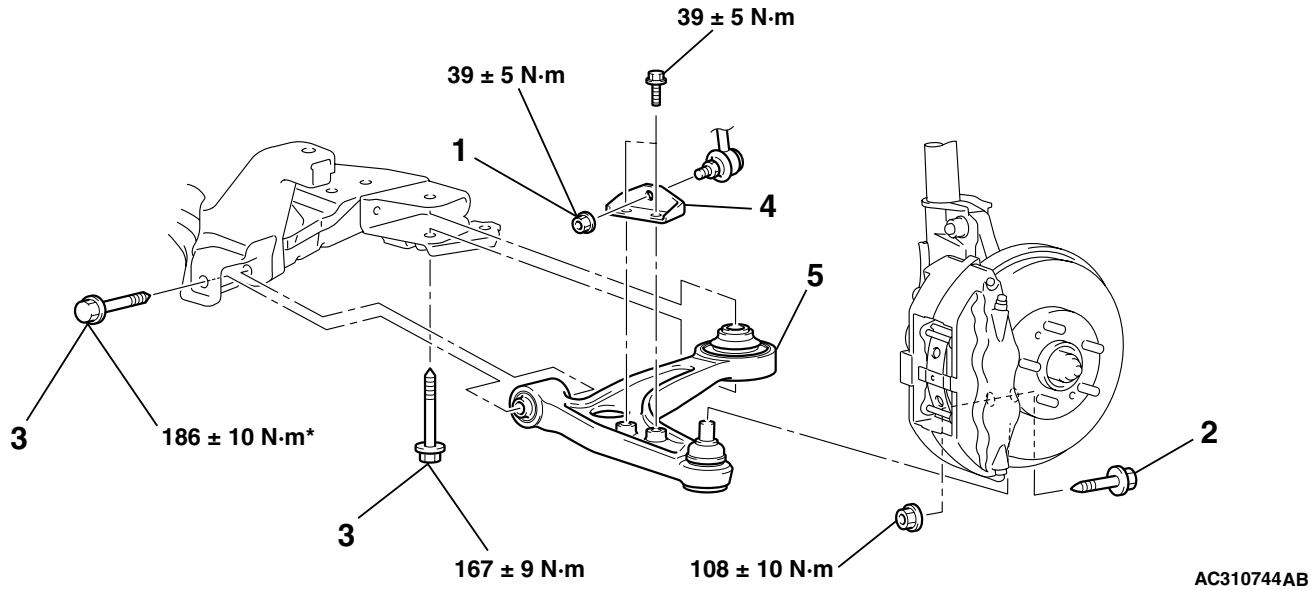

Removal steps
1. Stabilizer link nut
2. Lower arm and knuckle connection

<A> 3. Lower arm and crossmember connection

Removal steps (Continued)
4. Stabilizer bar bracket
5. Lower arm assembly

REMOVAL SERVICE POINT

<<A>> LOWER ARM AND CROSSMEMBER DISCONNECTION

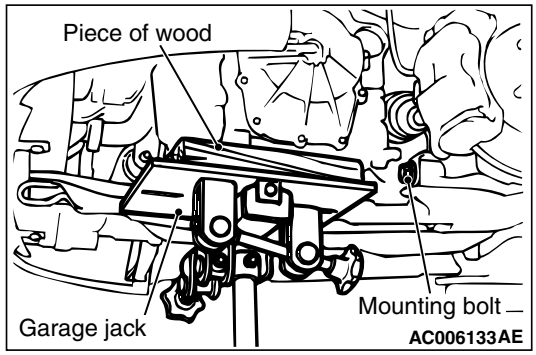

Lift the transmission with a transmission jack, and then withdraw the front mounting bolt on the left lower arm assembly.

INSPECTION

M1332001700338

LOWER ARM BALL JOINT BREAKAWAY TORQUE CHECK

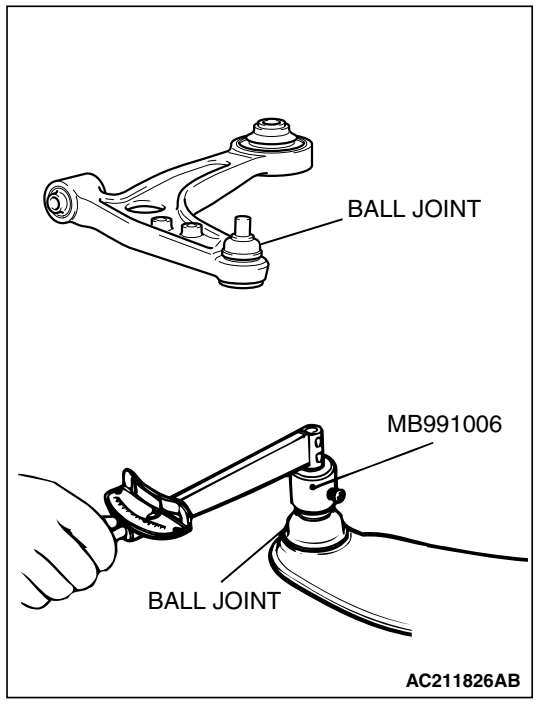

1. After shaking the ball joint stud several times, use special tool preload socket (MB991006) to measure the breakaway torque of the ball joint.

Standard value: 0.5 – 3.4 N·m

2. When the measured value exceeds the standard value, replace the lower arm assembly.
3. When the measured value is lower than the standard value, check that the lower arm ball joint turns smoothly without excessive play. If there is no excessive play, the ball joint can be reused.

PILLOW BALL BUSHING ROTATION STARTING TORQUE CHECK

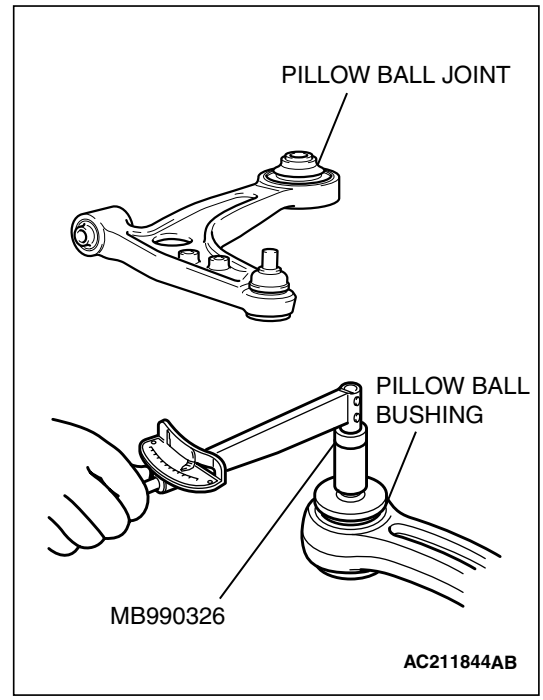

1. Insert the bolt to the lower arm pillow ball bushing. In the opposite direction, insert the washer then install the nut. After rotating the inner sleeve (contained washer) several times, measure the rotation starting torque of the lower arm pillow ball bushing using special tool preload socket (MB990326).

Standard value: 0.5 – 3.0 N·m

2. When the measured value exceeds the standard value, replace the pillow ball bushing.
3. When the measured value is lower than the standard value, check that the lower arm pillow ball bushing turns smoothly without excessive play. If there is no excessive play, the pillow ball bushing can be reused.

LOWER ARM BALL JOINT DUST COVER CHECK

1. Check the dust cover for cracks or damage by pushing it with your finger.
2. If the dust cover is cracked or damaged, replace the lower arm.

   NOTE: Cracks or damage to the dust cover may cause damage to the ball joint. When it is damaged during service work, replace the dust cover.

BALL JOINT DUST COVER REPLACEMENT

M1332008200312

If the dust cover is damaged accidentally during service work, replace the dust cover as follows:

1. Remove the dust cover.
2. Apply multipurpose grease to the lip and inside of the dust cover.

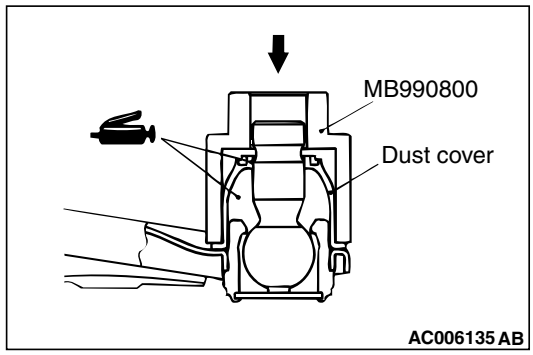

3. Using special tool ball joint remover and installer (MB990800), press the dust cover until it contacts the lower arm assembly.
4. Press the dust cover with your finger to check that there are no cracks or damage in the dust cover.

LOWER ARM PILLOW BALL BUSHING REPLACEMENT

M1332008100412

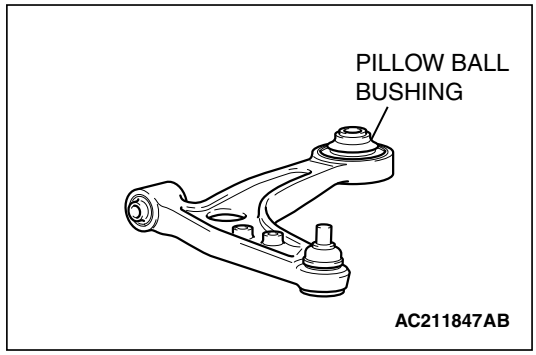

Replace the bushing as follows:

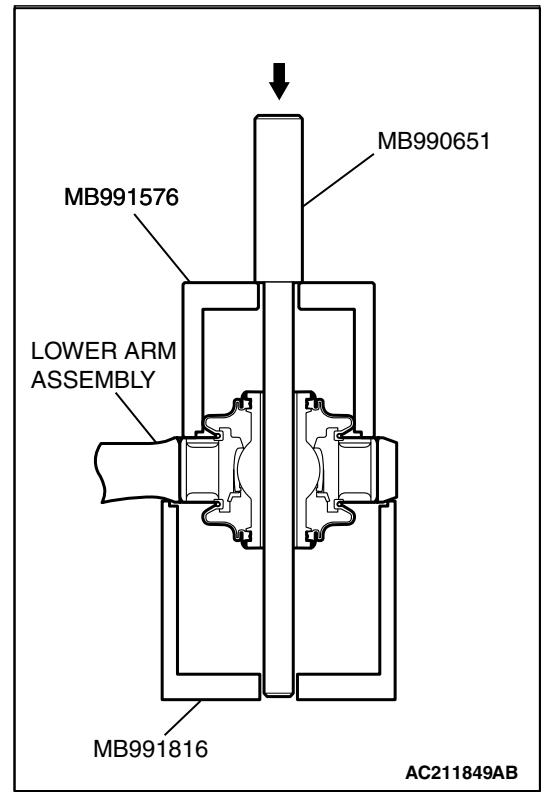

1. Use following special tools to drive out the bushing.
   - MB990651: Bar
   - MB991576: Base
   - MB991816: Bushing Remover & Installer base

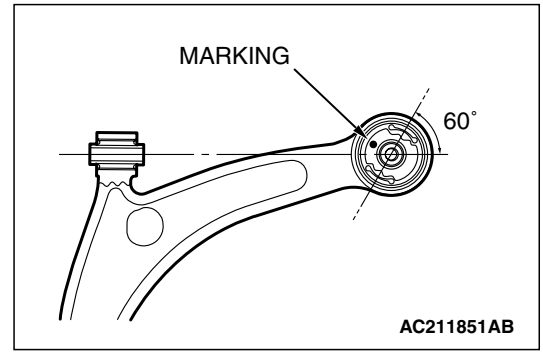

2. Set the bushing to the lower arm assembly so that the bushing marking and the opening are as shown in the illustration.

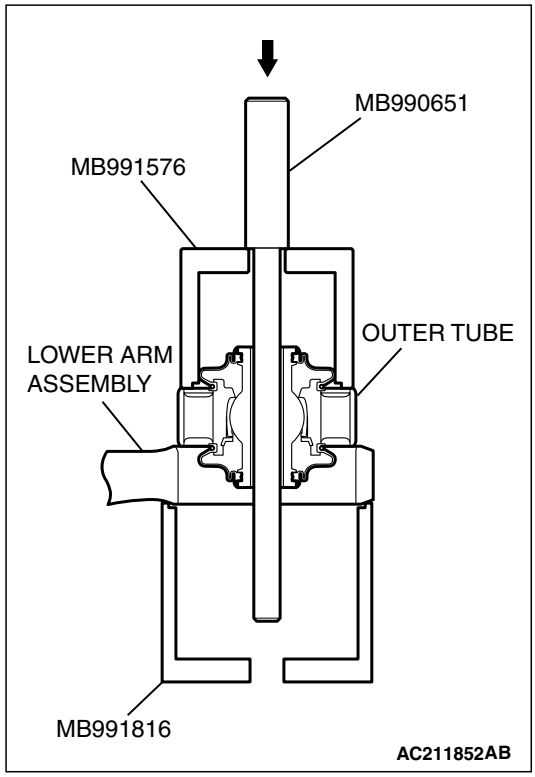

3. Use special tools to press in the bushing until its outer tube is flush with the lower arm assembly surface.

STABILIZER BAR

REMOVAL AND INSTALLATION

M1332004000383

⚠ CAUTION

- **Before removing the steering wheel and air bag module assembly, refer to GROUP 52B – Service Precautions (P.52B-4) and Driver's, Front Passenger's Air Bag Module(s) and Clock Spring (P.52B-113). Also, put the front wheels in straight-ahead position. Failure to do so may damage the SRS clock spring and render the SRS air bag inoperative, which results serious driver injury.**
- **During maintenance, take care not to contact the parts or tools to the caliper because the paint of caliper will be scratched. And if there is brake fluid on the caliper, wipe off quickly.**
- ***: Indicates parts which should be temporarily tightened, and then fully tightened with the vehicle on the ground in an unladen condition.**

Stabilizer Bar Pre-removal Operation	Stabilizer Bar Post-installation Operation
• Steering Wheel - Driver's Air Bag Module Assembly Removal (Refer to GROUP 37, Steering Wheel P.37-15). • Clock Spring Removal (Refer to GROUP 52B, Driver's, Front Air Bag Module(s) and Clock Spring P.52B-113). • Front Axle Crossmember Bar Removal (Refer to P.33-17). • Front Axle No.1 Crossmember Assembly Removal (Refer to GROUP 32, Crossmember P.32-11). • Front Exhaust Pipe Removal (Refer to GROUP 15, Exhaust Pipe and Main Muffler P.15-19).	• Front Exhaust Pipe Installation (Refer to GROUP 15, Exhaust Pipe and Main Muffler P.15-19). • Front Axle No.1 Crossmember Assembly Installation (Refer to GROUP 32, Crossmember P.32-11). • Front Axle Crossmember Bar Installation (Refer to P.33-17). • Clock Spring Installation (Refer to GROUP 52B, Driver's, Front Air Bag Module(s) and Clock Spring P.52B-113). • Steering Wheel - Driver's Air Bag Module Assembly Installation (Refer to GROUP 37, Steering Wheel P.37-15). • Check the Dust Cover for Cracks or Damage by Pushing it with Finger. • Checking Steering Wheel Position with Wheels Straight Ahead • Front Wheel Alignment Check and Adjustment (Refer to P.33-4).

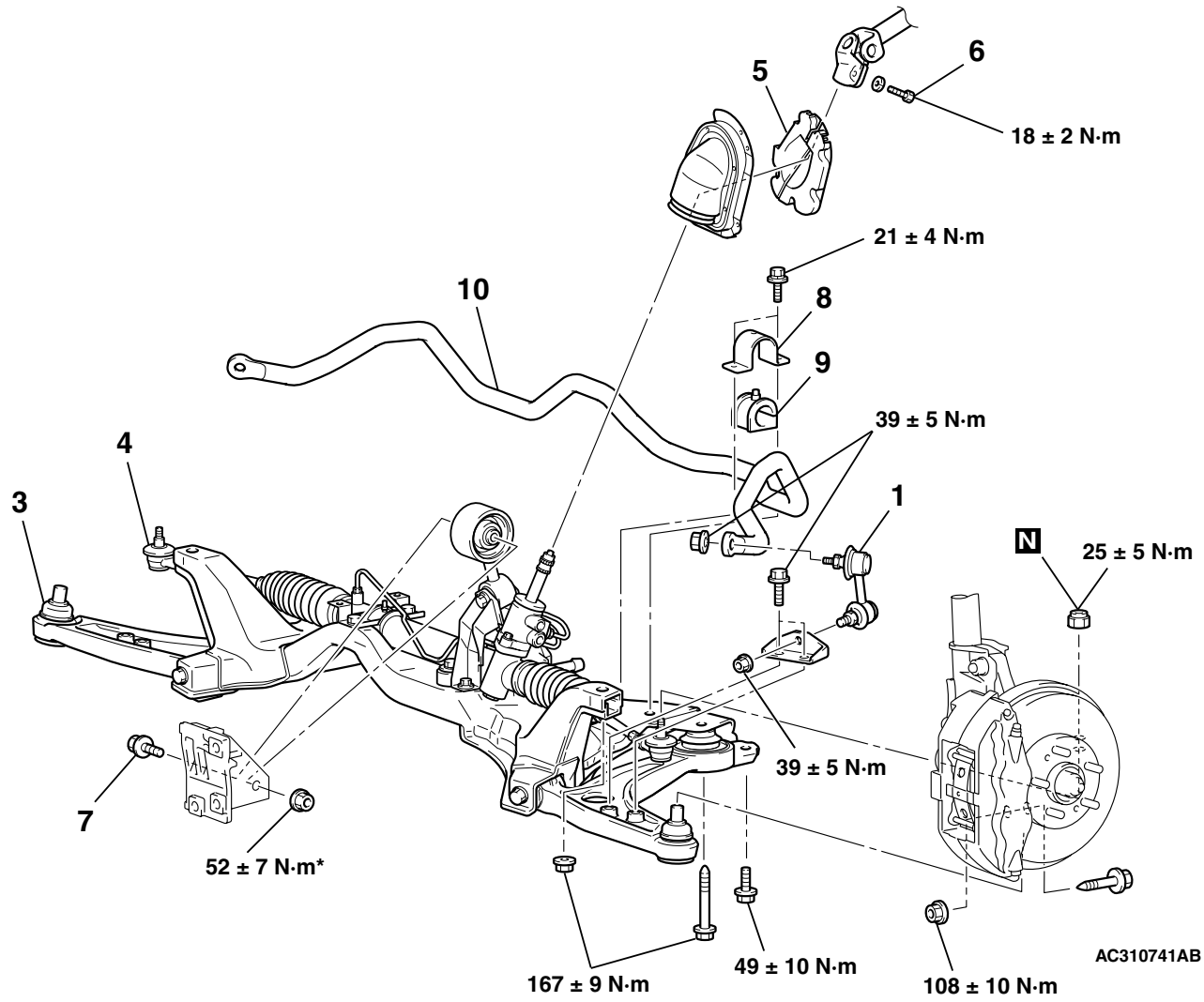

Removal steps

1. Stabilizer link
2. Stabilizer bar bracket
3. Lower arm and knuckle connection

<<A>> 4. Tie rod end knuckle connection

5. Steering shaft cover

Removal steps (Continued)

6. Steering gear and joint connection bolt
7. Rear roll stopper connection bolt

<<B>> >>A<< 8. Stabilizer bracket

<<B>> >>A<< 9. Stabilizer bushing

<<B>> >>A<< 10. Stabilizer bar

REMOVAL SERVICE POINTS

<<A>> TIE ROD END AND KNUCKLE DISCONNECTION

⚠ CAUTION

- **Do not remove the nut from ball joint. Loosen it and use special tool ball joint remover (MB991897) to avoid possible damage to ball joint threads.**
- **Hang special tool ball joint remover (MB991897) with a cord to prevent it from falling.**

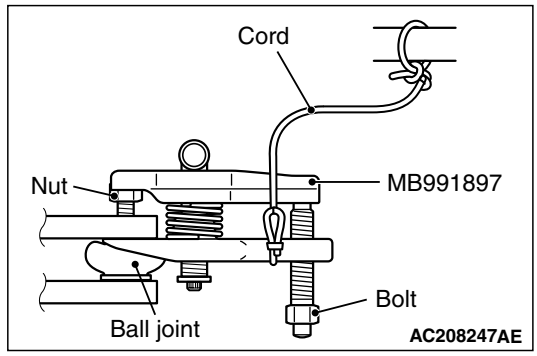

1. Install special tool ball joint remover (MB991897) as shown in the figure.

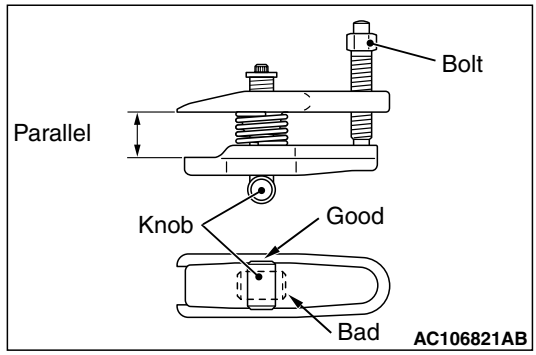

2. Turn the bolt and knob as necessary to make the jaws of special tool ball joint remover (MB991897) parallel, tighten the bolt by hand and confirm that the jaws are still parallel.

   NOTE: When adjusting the jaws in parallel, make sure the knob is in the position shown in the figure.
3. Tighten the bolt with a wrench to disconnect the tie rod end.

<<B>> STABILIZER BRACKET/STABILIZER BUSHING/STABILIZER BAR REMOVAL

Carry out the following operations to ensure working space in order to remove the fixture, the bushing and the stabilizer bar.

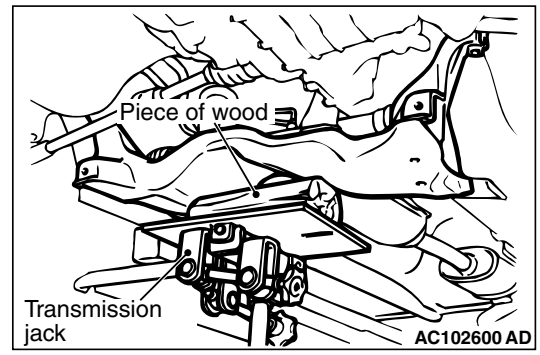

1. Use a transmission jack to hold the crossmember, remove the crossmember mounting nuts and bolts.

⚠ CAUTION

Be careful not to lower the crossmember excessively. The power steering return hose bracket may deform if the crossmember is lowered too much.

2. Lower the crossmember until the fixture, the bushing and the stabilizer bar can be removed.

INSTALLATION SERVICE POINTS

>>A<< STABILIZER BAR/STABILIZER BUSHING/FIXTURE/INSTALLATION

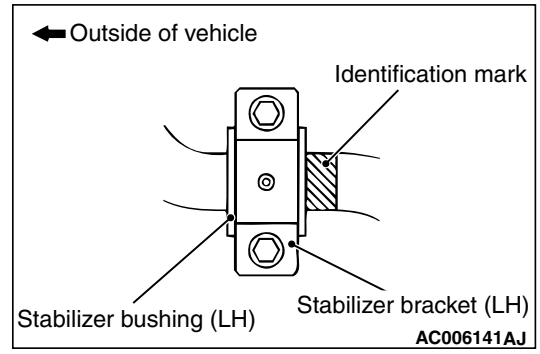

Align the stabilizer bar identification mark with the right end of the bushing (LH).

INSPECTION

M1332002000321

- Check the stabilizer bushings for wear and deterioration.
- Check the stabilizer bar for deterioration or damage.
- Check all bolts for condition and straightness.

STABILIZER LINK BALL JOINT TURNING TORQUE CHECK

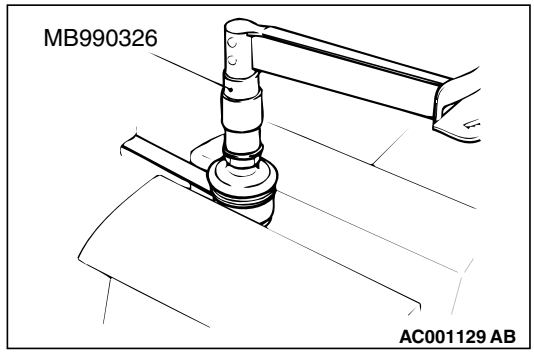

1. After shaking the ball joint stud several times, install the nut to the stud and use special tool preload socket (MB990326) to measure the turning torque of the ball joint.

   Standard value: 1.7 – 3.2 N·m

2. When the measured value exceeds the standard value, replace the stabilizer link.
3. When the measured value is lower than the standard value, check that the ball joint turns smoothly without excessive play. If so, it is possible to re-use that ball joint.

STABILIZER LINK BALL JOINT DUST COVER CHECK

1. Check the dust cover for cracks or damage by pushing it with your finger.
2. If the dust cover is cracked or damaged, replace the stabilizer link.

   NOTE: Cracks or damage of the dust cover may cause damage to the ball joint.

CROSSMEMBER BAR

REMOVAL AND INSTALLATION

M1332016100086

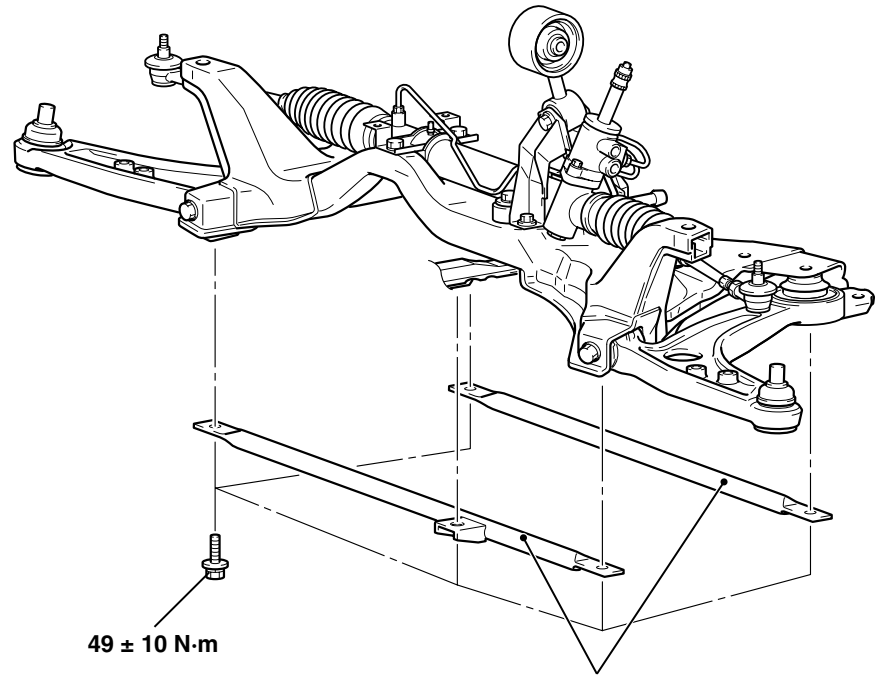

NOTES